KEYSTONE

A comprehensive range of ball valves to suit a wide variety of industrial applications.

Features

- The range includes one, two and three piece ball valve designs with screwed, weld or flanged end connections.
- 3/4-way multi-port designs available.
- ISO 5211 top mounting plate available, for easy actuation, on selected models.
- Body construction either investment or sand cast according to model.
- Carbon steel or stainless steel body materials.
- Wide range of pressure ratings available.
- Reduced and full bore models.
- Locking devices standard on all valves.
- Seat material options available.

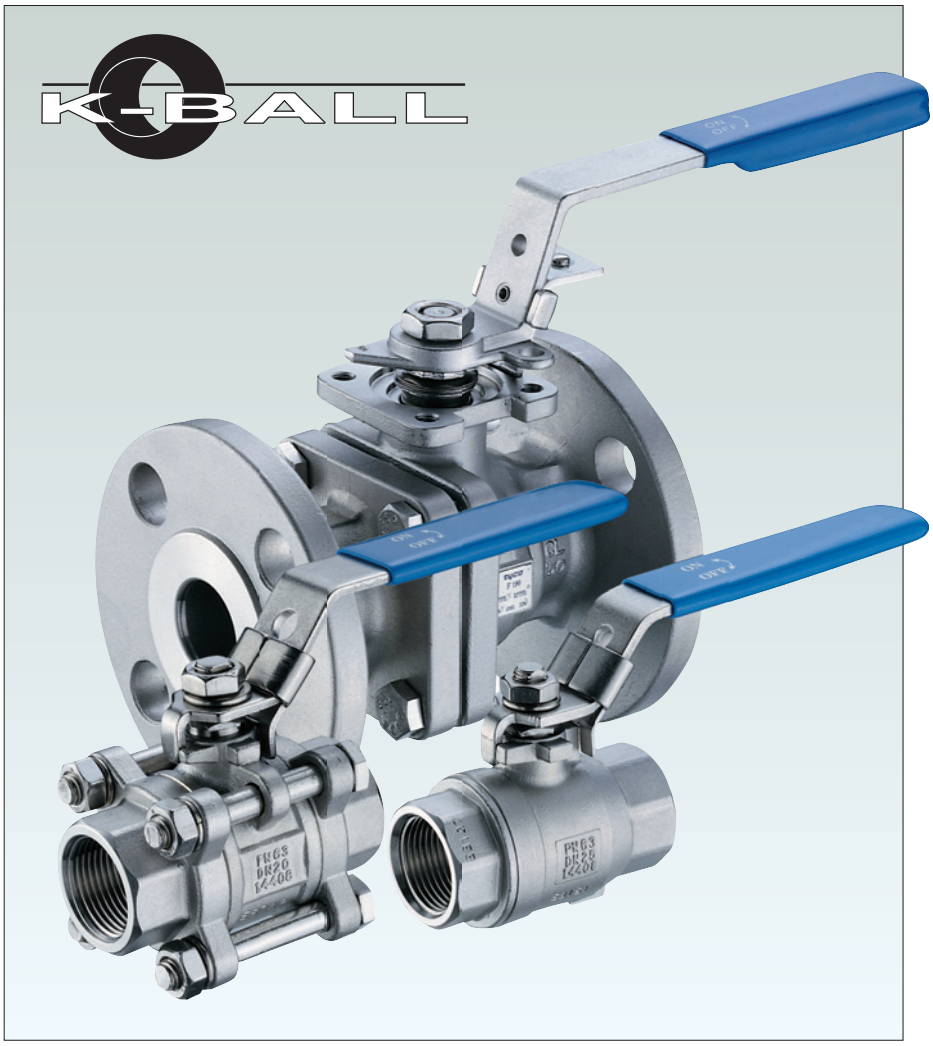

Top Work Dimensions (inches)

Flange Type	ØP	W
F03	1.42	M5
F04	1.65	M5
F05	1.97	M6
F07	2.76	M8
F10	4.02	M10
F12	4.92	M12
F14	5.51	M16

Application

The range includes valves ideal for general industrial and service applications including water, oil, gas and chemical processes. Certain models also offer designs suitable for more hazardous services such as fuel and inflammable substances.

Technical Data

Sizes : DN8 to DN300
1/4" to 12"

Pressure ratings : PN10/16,
PN25/40,
PN63
ANSI 150/300
JIS 10K/20K

End Connections

Screwed : BSPP, BSPT, NPT
Welded : Socket & Butt Weld
Flanged : ANSI 150/300
PN10/16, PN25/40
JIS 10K/20K

tyco / Flow Control

Total Flow Control Solutions™

Copyright © 2010 Tyco Flow Control. All rights reserved.

R110 : One-piece body ball valve

see page 6

- An economical, investment cast, one-piece body ball valve in stainless steel

Size range
DN8 (1/4") to DN50 (2")
- Reduced Bore

F120 : Two-piece body ball valve

see page 7

- General purpose, 1,000 psi (PN63) ball valve, in stainless steel

Size range
DN8 (1/4") to DN50 (2")
- Full Bore

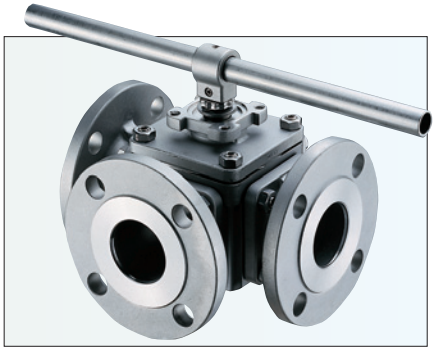

F130M, R130M : Three-way split-body ball valve

see page 8-9

- With ISO 5211 top mounting plate and fully enclosed bolting
- Flanged ANSI 150, 300 or DIN PN 10/16, 25/40 or JIS 10K
- L, T or LL port options, 90° operation
- Carbon steel or stainless steel bodies

Size range
DN50 (2") to DN150 (6")
- Full Bore
DN200 (8")
- Reduced Bore

F133M/F133MT, R133M :

see page 10-12

Three and four-way split-body ball valve

- With ISO 5211 top mounting plate and fully enclosed bolting
- End connections screwed, socket weld, butt weld or flanged
- Flanged ANSI 150, 300 or DIN PN 10/16, 25/40 or JIS 10K
- L, T or LL port options, 90° operation
- Carbon steel or stainless steel bodies

Size range
DN10 (3/8") to DN50 (2")
- Full and Reduced Bore

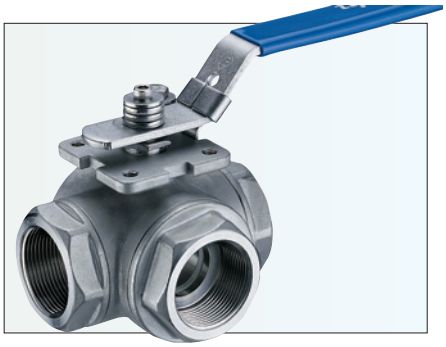

R138 : Three-way multi-port ball valve

see page 13

- With ISO 5211 top mounting plate
- Investment stainless steel cast body
- Screwed ends, NPT, BSPP, BSPT reduced bore
- L or T port options, 90° operation

Size range
DN8 (1/4") to DN50 (2")
- Reduced Bore

Copyright © 2010 Tyco Flow Control. All rights reserved.

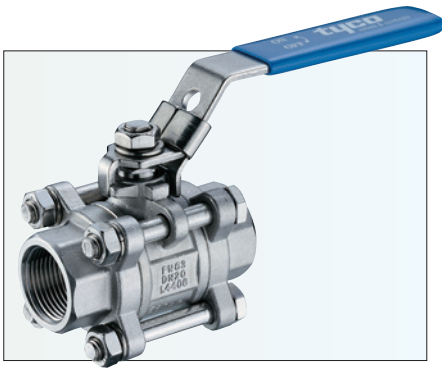

F151 : Three-piece economical ball valve

see page 14

- Three-piece, swing-out design
- End connections screwed, butt weld or socket weld
- Carbon steel or stainless steel bodies

Size range

DN8 (1/4") to DN100 (4")
- Full Bore

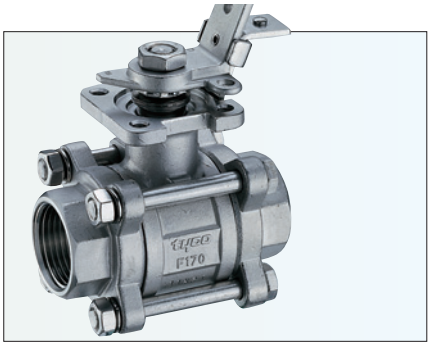

F171 : Three-piece ball valve to ISO 5211

see page 15-16

- With ISO 5211 top mounting plate
- End connections flanged, screwed, butt weld or socket weld
- Carbon steel or stainless steel bodies

Size range

DN8 (1/4") to DN100 (4")
- Full Bore

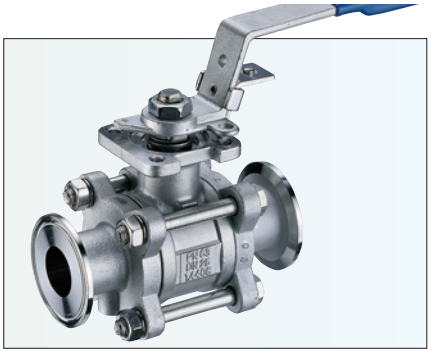

F171T : Three-piece high purity clean ball valve

see page 17-18

- With ISO 5211 mounting plate
- End connections butt weld, tubing and Tri-Clamp
- High purity cleaning (oil free)
- Helium leak detection calibrated to 1 x 10^{-5} std cc/sec

Size range

DN15 (1/2") to DN300 (12")
- Full Bore/True Bore

F180/F180F, R180/R180F :

see page 19-22

Three-piece heavy duty ball valve

- With ISO 5211 top mounting plate and fully enclosed bolting
- End connections screwed, butt weld or socket weld
- Carbon steel or stainless steel bodies
- F180F Fire safe tested to API 607

Size range

F180 - DN8 (1/4") to DN100 (4")
F180F - DN8 (1/4") to DN100 (4")
- Full Bore and Reduced Bore

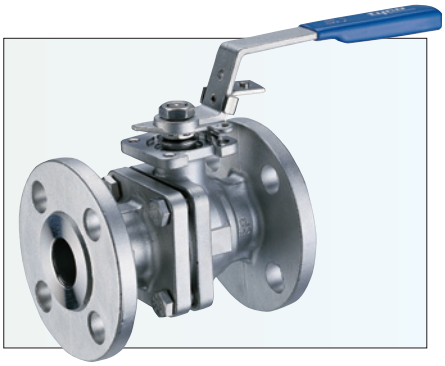

F190/F190F : Split-body flanged ball valve

see page 23-26

- With ISO 5211 top mounting pad
- Flanged ANSI 150, 300 or DIN PN10/16, 25/40 or JIS 10K, 20K
- Investment casting for 4" and under carbon steel or stainless steel bodies
- F190F Fire safe tested to API 607

Size range

DN15 (1/2") to DN300 (12")
- Full Bore

Copyright © 2010 Tyco Flow Control. All rights reserved.

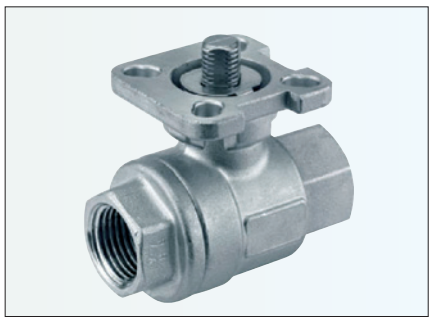

F129 : Two-piece direct mounting ball valve

see page 27

- Investment casting body and cap
- Blow-out proof stem
- ISO 5211 direct mount pad

Size range

DN15 (1/2") to DN80 (3")
- Full Bore

R139 : Three-way multi-port direct mounting ball valve

see page 28-29

- An economical, investment casting body and cap in stainless steel
- Variety of thread standards available
- Blow-out proof stem
- L or T port options
- ISO 5211 mounting pad
- 4 seats for rigid ball supporting

Size range

DN8 (1/4") to DN50 (2")
- Reduced Bore

Copyright © 2010 Tyco Flow Control. All rights reserved.

Availability Matrix

The following chart indicates models and sizes available

Model		DN8 1/4"	DN10 3/8"	DN15 1/2"	DN20 3/4"	DN25 1"	DN32 1 1/4"	DN40 1 1/2"	DN50 2"	DN65 2 1/2"	DN80 3"	DN100 4"	DN125 5"	DN150 6"	DN200 8"	DN250 10"	DN300 12"
R110	-SS	•	•	•	•	•	•	•	•								
F120	-SS	•	•	•	•	•	•	•	•								
F129	-SS			•	•	•	•	•	•	•	•						
F130M	-SS								•	•	•	•		•	• RB		
	-CS								•	•	•	•		•	• RB		
R/F133M	-SS		•	•	•	•	•	•	• RB								
	-CS		•	•	•	•	•	•	• RB								
R138	-SS	•	•	•	•	•	•	•	•								
R139	-SS	•	•	•	•	•	•	•	•								
F151	-SS	•	•	•	•	•	•	•	•	•	•	•					
	-CS	•	•	•	•	•	•	•	•	•	•	•					
F171	-SS	•	•	•	•	•	•	•	•	•	•	•					
	-CS	•	•	•	•	•	•	•	•	•	•	•					
R/F180	-SS	•	•	•	•	•	•	•	•	•	•	• RB					
R/F180F	-SS		•	•	•	•	•	•	•	•	•	• RB					
	-CS		•	•	•	•	•	•	•	•	•	• RB					
F190	-SS			•	•	•	•	•	•	•	•	•	•	•	•	•	•
	-CS			•	•	•	•	•	•	•	•	•	•	•	•	•	•
F190F	-SS			•	•	•	•	•	•	•	•	•	•	•	•	•	•
	-CS			•	•	•	•	•	•	•	•	•	•	•	•	•	•

* SS = Stainless Steel
CS = Carbon Steel
RB = Reduced Bore

Patented SEALMASTER™ Stem Seal Arrangement - Available for Figures R/F130M, R/F133M, F171, R/F180, F190

Our extremely high cycle stem sealing design is accomplished by double sealing system. The high performance of Tyco Ball Valves is mainly due to unique SEALMASTER™ stem seal arrangement, which provides a primary sealing. It has been specially designed and constructed to prevent line fluid permeation and resultant leakage. On top of this arrangement are multiple layers of V-Ring stem packing this acts as secondary sealing. A set of Belleville washers automatically and constantly compresses the seals to adjust for wear, pressure and temperature fluctuations. Every Tyco Ball Valve is a stalwart barrier against Fugitive Emissions.

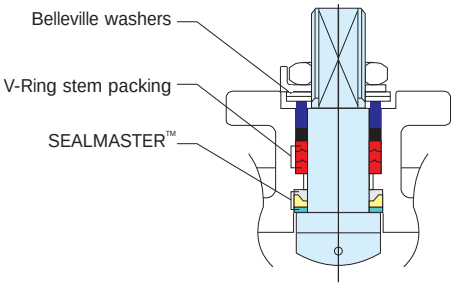

Explanation of SEALMASTER™

The live loaded SEALMASTER™ is a combination of 3 components; (A) a cup and cone PFA/TFE upper thrust seal, (B) a cup and cone sintered 316SS center load ring and (C) a flat SS/TFE lower thrust seal. When tightened, the live loaded stem pulls up and compressing the stem thrust seals.
As this happens, material from upper and lower thrust seal extrude between stem and body enclosures. (See 1-6). The surfaces between the bottom of lower thrust seal and top of stem flange are smooth and all rotation occurs between these two surfaces leaving the stem thrust seal "static" to create the best possible seal. As rotation continues, components bed in and keep seal performance constant with usage.

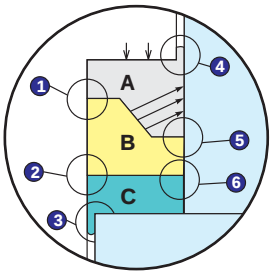

Main features of SEALMASTER™ - patented stem seal arrangement

- MULTIPLE sealing up to 6 areas (see view 1 - 6).
- Encapsulated STATIC sealing achieved on upper thrust seal.
- Constant sealing force transmitted to stem (see arrow) making stem primary sealing "positive"
- Excellent wear resistance on lower thrust seal (50% SS filled PTFE).
- Reduced seal friction as a result of better than Ra 0.8 m (150 grit) stem finish

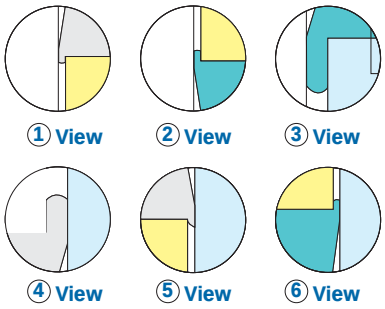

Copyright © 2010 Tyco Flow Control. All rights reserved.

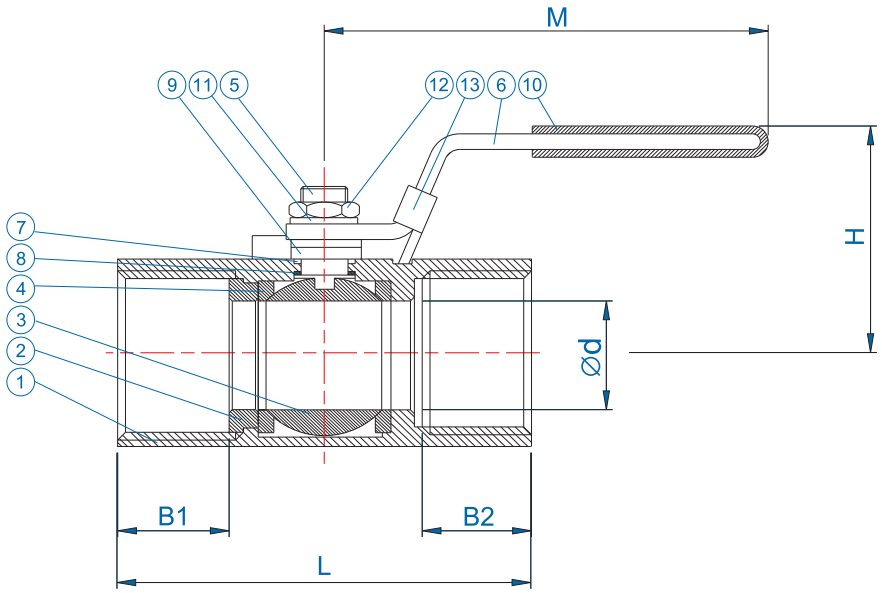

Materials of Construction

No.	Parts Name	Material	Quantity
1	Body	CF8M / 1.4408	1
2	Insert	ASTM A351 Gr. CF8M	1
3	Ball	ASTM A351 Gr. CF8M	1
4	Seat	PTFE	2
5	Anti-Static Stem	A276 Type 316	1
6	Handle	304SS	1
7	Stem Packing	PTFE	1
8	Thrust Washer	PTFE	1
9	Gland Ring	304SS	1
10	Handle Sleeve	Vinyl	1
11	Handle Washer	304SS	1
12	Stem Nut	304SS	1
13	Locking Device	304SS	1

Dimensions (inches)

Size	DN	Ød	M	H	L	B1	B2	Wt (lbs)
1/4"	8	0.20	2.46	1.50	1.54	0.39	0.35	0.16
3/8"	10	0.28	2.87	1.57	1.73	0.39	0.31	0.25
1/2"	15	0.36	3.35	2.01	2.22	0.55	0.51	0.43
3/4"	20	0.49	3.43	2.11	2.32	0.53	0.55	0.60
1"	25	0.63	4.21	2.20	2.80	0.65	0.63	0.95
1 1/4"	32	0.79	4.21	2.42	3.07	0.69	0.67	1.58
1 1/2"	40	0.98	5.12	2.68	3.27	0.73	0.67	1.92
2"	50	1.26	5.12	2.87	3.94	0.85	0.71	3.01

Features

- General purpose 1,000psi (PN63), ball valve
- Investment cast, one-piece body
- Stainless steel construction only
- Screwed end to : BSPP
  BSPT
  NPT
- Blow-out proof stem
- Locking device
- Size range DN8 (1/4") to DN50 (2") - Reduced bore

Note:
For Pressure/Temperature charts, please refer to Page 30

Copyright © 2010 Tyco Flow Control. All rights reserved.

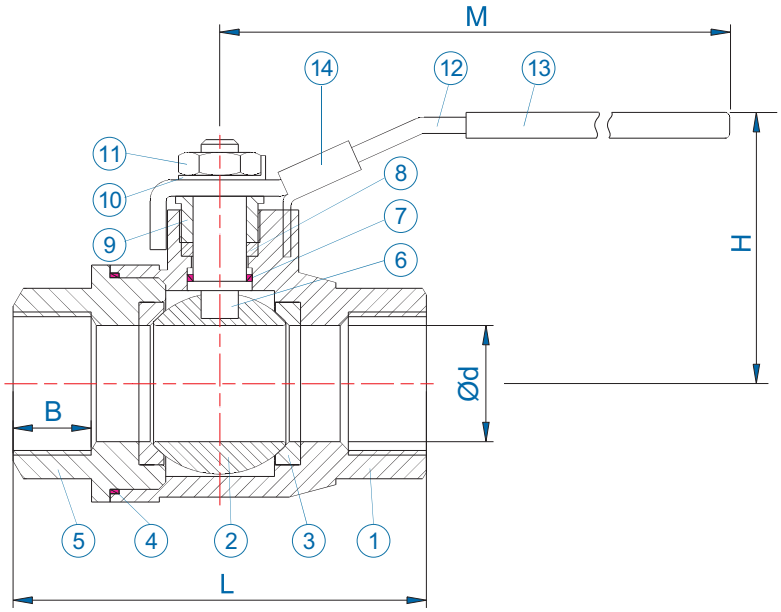

Features

- General purpose 1,000psi (PN63), ball valve
- Two-piece, investment cast body
- Stainless steel construction only
- Screwed end to : BSPP
  BSPT
  NPT
- DIN 3202 M3 face-to-face
- Adjustable stem packing
- Locking device
- Size range DN8 (1/4") to DN50 (2") - Full bore

Note:
For Pressure/Temperature charts, please refer to Page 30

Materials of Construction

No.	Parts Name	Material	Quantity
1	Body	CF8M / 1.4408	1
2	Ball	ASTM A351 Gr. CF8M	1
3	Seat	PTFE	2
4	Body Seal	PTFE	1
5	Cap	CF8M / 1.4408	1
6	Anti-Static Stem	A276 Type 316	1
7	Thrust Washer	PTFE	1
8	Stem Packing	PTFE	1
9	Gland Nut	304SS	1
10	Stem Washer	304SS	1
11	Stem Nut	304SS	1
12	Handle	304SS	1
13	Handle Sleeve	Vinyl	1
14	Locking Device	304SS	1

Dimensions (inches)

Size	DN	Ød	M	H	L	B	Wt (lbs)
1/4"	8	0.44	4.25	2.05	1.97	0.39	0.53
3/8"	10	0.44	4.25	2.13	2.36	0.39	0.62
1/2"	15	0.59	5.35	2.44	2.95	0.51	0.97
3/4"	20	0.79	5.91	2.56	3.15	0.63	1.23
1"	25	0.98	6.61	3.15	3.54	0.67	1.94
1 1/4"	32	1.26	6.61	3.35	4.33	0.79	3.17
1 1/2"	40	1.57	7.68	3.74	4.72	0.87	4.25
2"	50	1.97	7.68	4.33	5.51	0.98	7.41

Copyright © 2010 Tyco Flow Control. All rights reserved.

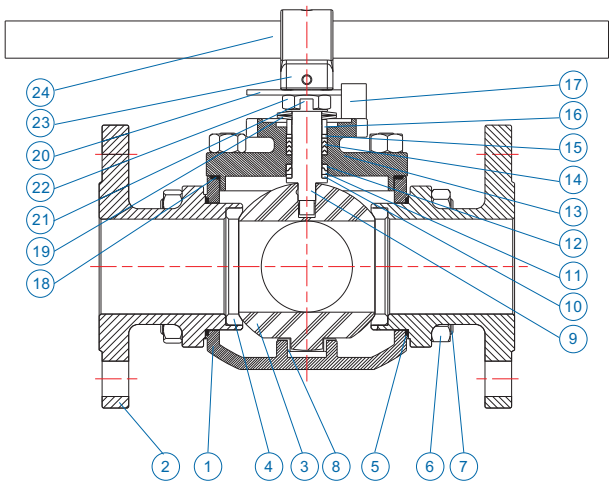

Materials of Construction

No.	Parts Name	Material	Quantity
1	Body	CF8M / WCB, 1.4408 / 1.0619	1
2	Cap	CF8M / WCB, 1.4408 / 1.0619	3-4
3	Ball	ASTM A351 Gr. CF8M	1
4	Ball Seat	RPTFE	4
5	Body Gasket	PTFE	4
6	Bolt Nut	A2-70	Note 1
7	Bolt	A2-70/8.8	Note 1
8	Bushing	50% SS Powder / 50% PTFE	1
9	Anti-Static Stem	A276 Type 316	1
10	Lower Thrust Washer	50% SS Powder / 50% PTFE	1
11	Compress Ring	316L SS (2" to 4") / 316 SS (6" to 8")	1
12	Upper Thrust Washer	TFM1600	1
13	Cover	CF8M / WCB, 1.4408 / 1.0619	1
14	V-Ring Stem Packing	PTFE	1 Set
15	Thrust Washer	50% SS Powder / 50% PTFE	1
16	Gland	304SS	1
17	Stop Bolt	Stainless Steel	1-2
18	Cover Seal	PTFE	1
19	Belleville Washer	301SS	2
20	Triangle Stopper	Stainless Steel	1
21	Lock Saddle	Stainless Steel	1
22	Stem Nut	304SS	1-2
23	Stem Adapter	304SS	1
24	Handle	SGP Zn Plating	1
25	Block Cover	ASTM A351 Gr. CF8M / ASTM A216 Gr. WCB	1 Note 2

Note 1: 2" to 3", All Standards: 20pcs
4", All Standards: 28pcs
6" Class 150, PN10/16, 10K, All Standards: 44pcs
6" Class 300, PN25/40, 20K, All Standards: 56pcs

Note 2: For No 25 Block cover, please refer to page 7

Ball Port Configuration

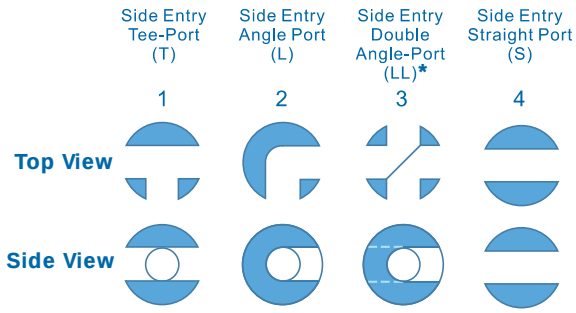

*Please consult factoy for minimum order quantity

Features

- Four seats design
- Simplicity in replacing valve seats and packing
- Investment cast body DN50 (2") to DN100 (4")
- Sand casting DN150 (6") and DN200 (8") reduced bore
- Standard L-port and T-port; optional LL port for 4-way (*)
- Tightness to EN12266-1 Rate A
- Patented “SEALMASTER” stem arrangement
- Double stem sealing complies with TA-LUFT requirements
- Semi-trunnion mounted
- Lower operation torque
- ISO 5211 mounting plate
- Full bore and flanged connection
- Anti-static design according to EN1983/ ISO 17292/BS5351
- Optional ball & body patterns for various flow paths
- Valve pressure rating:
  ANSI Class 150/300
  DIN PN10/16/25/40
  JIS 10K

Note:
For Pressure/Temperature charts, please refer to Page 30
For Flow Plan chart options, please refer to Page 37

Copyright © 2010 Tyco Flow Control. All rights reserved.

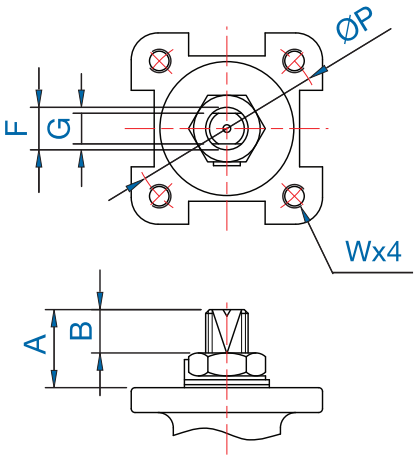

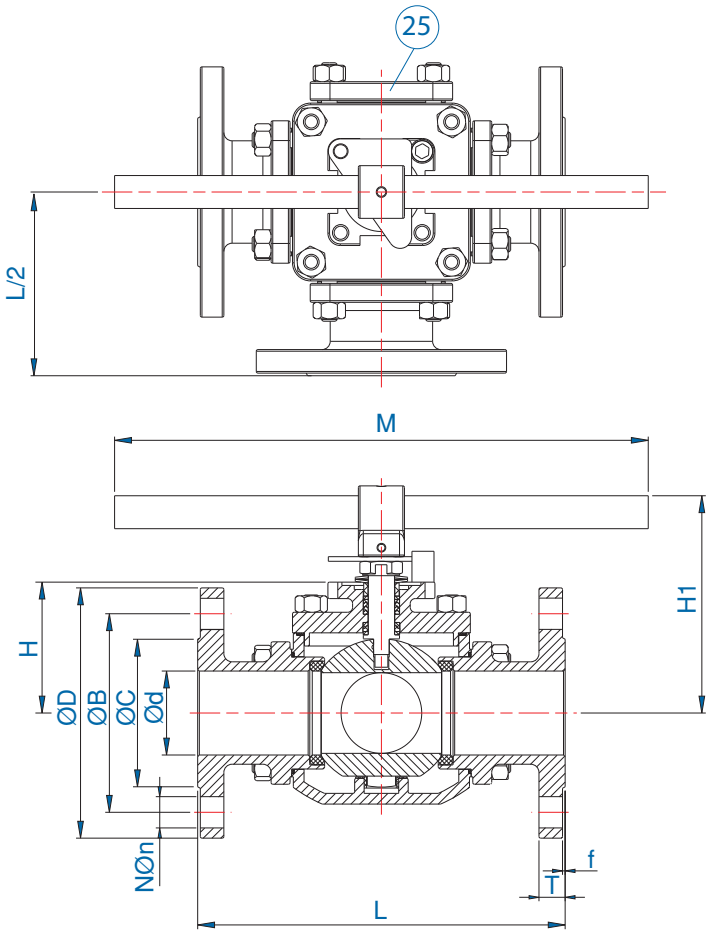

Dimensions (inches)

Size	DN	A	B	ØP	F	G	W
2"	50	1.08	0.69	2.76	0.63	0.37	M8
2 1/2"	65	1.69	0.94	4.02	0.88	0.67	M10
3"	80	1.63	0.94	4.02	0.88	0.67	M10
4"	100	1.86	1.14	4.02	1.13	0.67	M10
*6"	150	2.56	1.46	4.92	1.34	0.91	M12
**8"	200	2.56	1.46	4.92	1.34	0.91	M12

			ØB					ØC				ØD					T				
Size	DN	Ød	ANSI 150	ANSI 300	JIS 10K	PN 10/16	PN 25/40	ANSI 150 ANSI 300	JIS 10K	PN 10/16	PN 25/40	ANSI 150	ANSI 300	JIS 10K	PN 10/16	PN 25/40	ANSI 150	ANSI 300	JIS 10K	PN 10/16	PN 25/40
2"	50	1.97	4.74	5.00	4.72	4.92	4.92	3.62	3.78	4.02	4.02	5.98	6.50	6.10	6.50	6.50	0.63	0.88	0.63	0.79	0.79
2 1/2"	65	2.56	5.49	5.87	5.51	5.71	5.71	4.13	4.57	4.80	4.80	7.01	7.48	6.89	7.28	7.28	0.69	1.00	0.71	0.71	0.87
3"	80	2.99	6.00	6.61	5.91	6.30	6.30	5.00	4.96	5.43	5.43	7.48	8.27	7.28	7.87	7.87	0.75	1.13	0.71	0.79	0.94
4"	100	3.94	7.50	7.87	6.89	7.09	7.48	6.18	5.94	6.22	6.38	9.02	10.00	8.27	8.66	9.25	0.94	1.25	0.71	0.79	0.94
6"	150	5.91	9.50	10.63	9.45	9.45	9.84	8.50	8.35	8.35	8.58	11.00	12.50	11.02	11.22	11.81	1.00	1.44	0.87	0.87	1.10
**8"	200	5.91	11.75	N/A	N/A	11.61	N/A	10.63	N/A	10.55	N/A	13.50	N/A	N/A	13.39	N/A	1.13	N/A	N/A	0.94	N/A

		f				N					Øn					L							
Size	DN	ANSI 150 ANSI 300	JIS 10K	PN 10/16	PN 25/40	ANSI 150	ANSI 300	JIS 10K	PN 10/16	PN 25/40	ANSI 150	ANSI 300	JIS 10K	PN 10/16	PN 25/40	ANSI 150	ANSI 300	JIS 10K	PN 10/16	PN 25/40	H	H1	M
2"	50	0.06	0.08	0.08		4	8	4	4	4	0.75	0.75	0.75	0.71	0.71	8.66	8.66	8.66	9.06	9.06	3.15	5.37	15.55
2 1/2"	65	0.06	0.08	0.08		4	8	4	4	8	0.75	0.87	0.75	0.71	0.71	11.02	11.02	11.02	11.42	11.42	3.82	6.38	19.49
3"	80	0.06	0.08	0.08		4	8	8	8	8	0.75	0.87	0.75	0.71	0.71	11.22	11.22	11.22	12.20	12.20	4.25	7.32	19.49
4"	100	0.06	0.08	0.08		8	8	8	8	8	0.75	0.87	0.75	0.71	0.87	13.66	13.66	13.66	13.78	13.78	5.08	8.39	25.59
*6"	150	0.06	0.08	0.08		8	12	8	8	8	0.87	0.87	0.91	0.87	1.02	18.90	21.26	18.90	18.90	21.26	8.44	11.02	31.50
** 8"	200	0.06	0.08	0.08		8	N/A	12	12	N/A	0.87	N/A	0.91	0.87	N/A	18.90	N/A	18.90	18.90	N/A	8.46	11.02	31.50

* For 6" ANSI 300, DIN PN25/40 & JIS 20K, please consult facttory.
** Reduce bore only.

Copyright © 2010 Tyco Flow Control. All rights reserved.

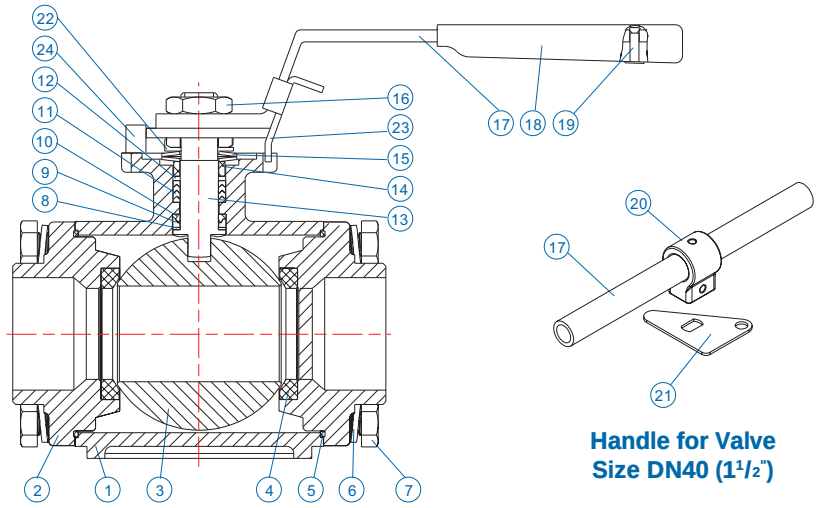

Handle for Valve Size DN40 (1 1/2")

Materials of Construction

No.	Parts Name	Material	Quantity
1	Body	CF8M / WCB, 1.4408 / 1.0619	1
2	Cap	CF8M / WCB, 1.4408 / 1.0619	3-4
3	Ball	ASTM A351 Gr. CF8M	1
4	Ball Seat	RPTFE	4
5	Body Gasket	PTFE	4
6	Bolt Washer	304SS	16
7	Bolt	A2-70	16
8	Lower Thrust Washer	50% SS Powder / 50% PTFE	1
9	Compress Ring	316L SS	1
10	Upper Thrust Washer	TFM1600	1
11	V-Ring Stem Packing	PTFE	1 Set
12	Thrust Washer	50% SS Powder / 50% PTFE	1
13	Anti-Static Stem	A276 Type 316	1
14	Gland	304SS	1
15	Belleville Washer	301SS	2
16	Stem Nut	304SS	1-2
17	Handle	CF8 (1/2" to 1 1/4") / SGP Zn Plating (1 1/2")	1
18	Handle Sleeve	Vinyl	1
19	Rivet	304SS	1
20	Stem Adapter	304SS	1
21	Triangle Stopper	Stainless Steel	1
22	Lock Saddle	Stainless Steel	1
23	Locking Trigger	Stainless Steel	1
24	Stop Bolt	Stainless Steel	1
25	Block Cover	CF8M / WCB, 1.4408 / 1.0619	1

- 3/8" to 1 1/4" For standard handle
- 1 1/2" T-handle

Features

- Four seats design
- Simplicity in replacing valve seats and packing
- Investment casting for body and end cap
- Optional LL port for 4-way (*)
- Patented "SEALMASTER" stem arrangement
- Double stem sealing complies with TA-LUFT requirements
- Blow-out proof stem
- ISO 5211 mounting plate
- Anti-static design according to EN1983/ ISO 17292/BS5351
- Optional ball & body patterns for various flow paths
- Weld in place for socket or butt weld end
- Size range DN10 (3/8") to DN50 (2") - Full and reduced bore
- Valve pressure rating:
  ANSI Class 150/300
  DIN PN10/16/25/40
  JIS 10K
- End connections screwed, butt weld, socket weld and flanged
- Flanged connection in full bore only
- Tightness to EN12266-1 Rate A
- Patented "POSILOCK" handle for DN15 (1/2") to DN32 (1 1/4") full bore

Ball Port Configuration

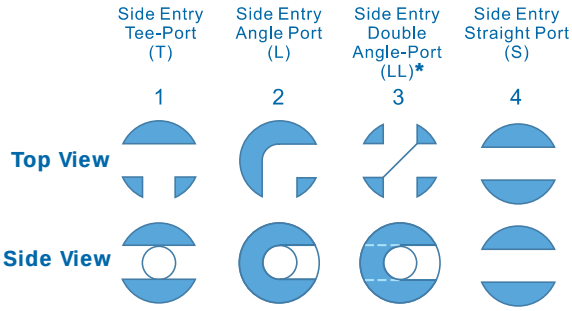

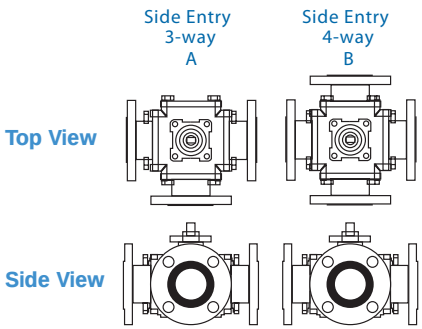

* Please consult factory for minimum order quantity.
LL-port is not available for F133MT

Copyright © 2010 Tyco Flow Control. All rights reserved.

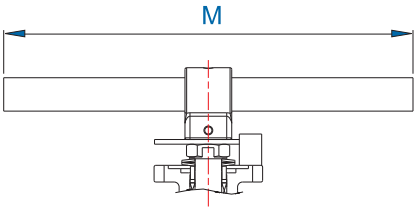

Full bore DN40 (1 1/2")
Reduced bore DN50 (2")

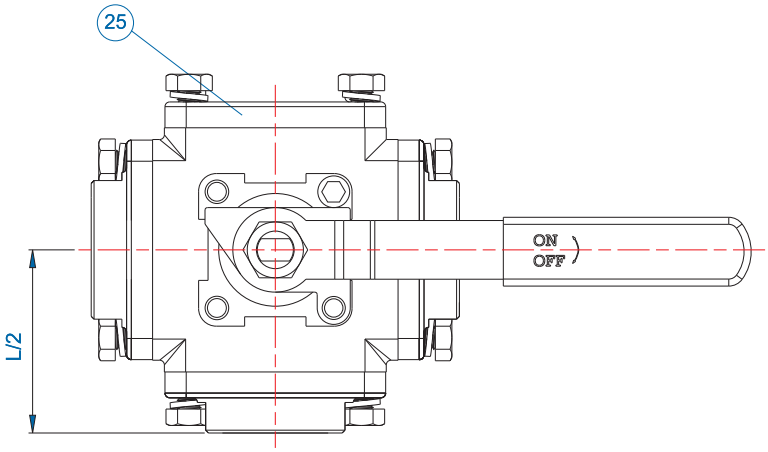

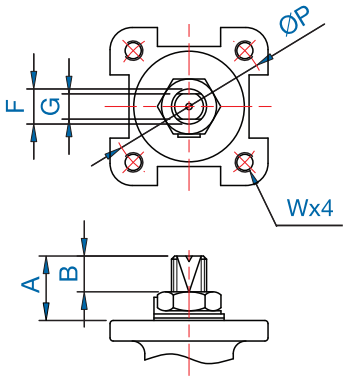

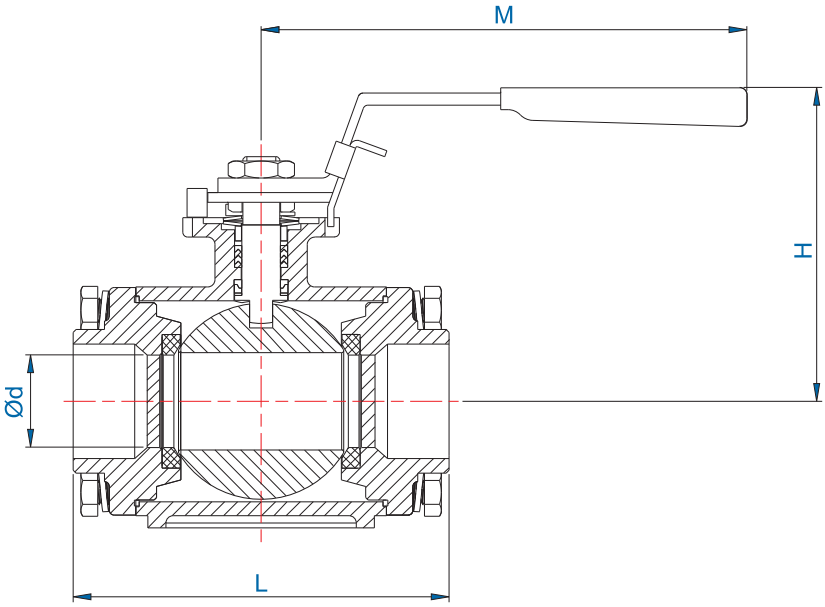

Note:
For Pressure/Temperature charts, please refer to Page 31
For Flow Plan chart options, please refer to Page 37

Dimensions (inches)

Size F	Size R	DN F	DN R	Ød	H	L	M	A	B	G	ØP	F	W
3/8"	1/2"	10	15	0.49	2.50	3.54	4.53	0.49	0.22	0.25	1.65	0.38	M5
1/2"	3/4"	15	20	0.61	3.23	4.21	5.12	0.72	0.42	0.25	1.65	0.38	M5
3/4"	1"	20	25	0.79	3.39	4.35	5.12	0.86	0.55	0.31	1.97	0.44	M6
1"	1 1/4"	25	32	0.98	3.86	4.98	6.50	0.86	0.56	0.31	1.97	0.44	M6
1 1/4"	1 1/2"	32	40	1.26	3.94	5.31	7.87	0.96	0.59	0.37	2.76	0.63	M8
1 1/2"	2"	40	50	1.50	5.00	6.06	15.55	0.96	0.59	0.37	2.76	0.63	M8

F: Full bore
R: Reduced bore

Copyright © 2010 Tyco Flow Control. All rights reserved.

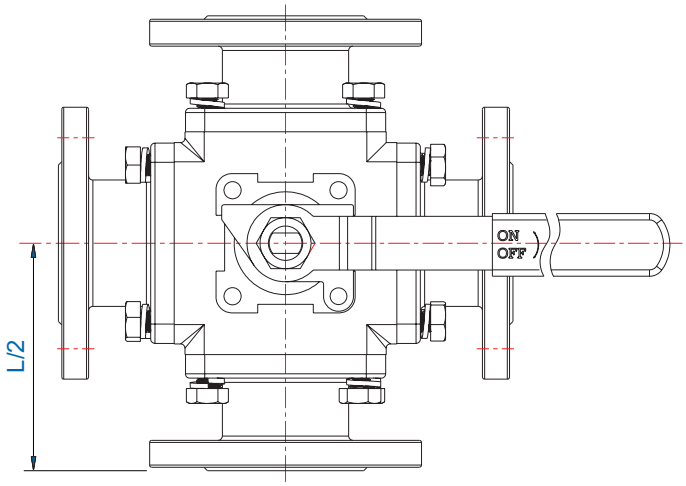

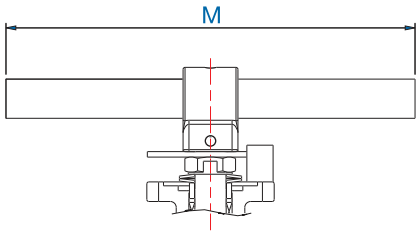

Sizes DN40 (1 1/2")

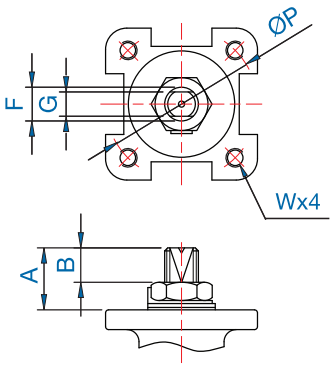

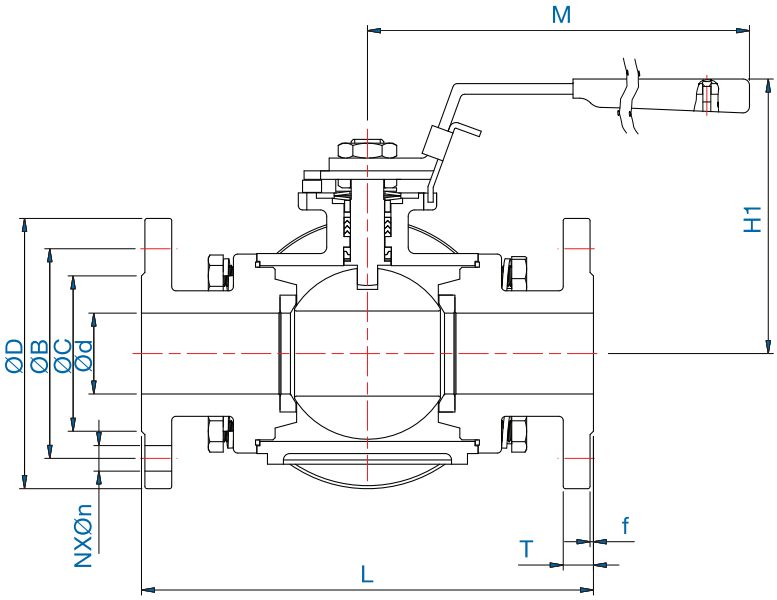

Note:
For Pressure/Temperature charts, please refer to Page 31

Dimensions (inches)

Size	DN	A	B	ØB ANSI 150 ANSI 300	ØB JIS 10K JIS 20K	ØB PN 10/40	ØC ANSI 150	ØC ANSI 300	ØC PN 10/40	ØC JIS 10K JIS 20K	Ød	ØP	ØD ANSI 150	ØD ANSI 300	ØD PN 10/40	ØD JIS 10K JIS 20K	N	M	W
1/2"	15	0.75	0.45	1.38	2.01	1.77	3.50	3.74	3.74	3.74	0.61	1.65	2.38	2.62	2.56	2.76	4	5.12	M5
3/4"	20	0.86	0.55	1.69	2.20	2.28	3.86	4.61	4.13	3.94	0.79	1.97	2.76	3.25	2.95	2.95	4	5.12	M6
1"	25	0.86	0.56	2.01	2.64	2.68	4.25	4.88	4.53	4.92	0.98	1.97	3.13	3.50	3.35	3.54	4	6.50	M6
1 1/2"	40	0.96	0.59	2.87	3.19	3.46	5.00	6.14	5.91	5.51	1.50	2.76	3.88	4.51	4.33	4.13	4	15.75	M8

Size	DN	F	G	H1	L ANSI 150 JIS 10K	L ANSI 300 JIS 20K	L PN 10/40	T ANSI 150	T ANSI 300	T PN 10/40	T JIS 10K	T JIS 20K	f ANSI 150 ANSI 300	f JIS 10K JIS 20K	f PN 10/40	Øn ANSI 150	Øn ANSI 300	Øn JIS 10K JIS 20K	Øn PN 10/40
1/2"	15	0.38	0.25	3.23	5.83	6.08	6.21	0.44	0.56	0.63	0.47	0.55	0.06	0.04	0.08	0.63	0.63	0.59	0.55
3/4"	20	0.44	0.31	3.39	6.06	6.44	6.61	0.44	0.63	0.71	0.55	0.63	0.06	0.04	0.08	0.63	0.75	0.59	0.55
1"	25	0.44	0.31	3.86	6.63	7.13	7.17	0.44	0.69	0.71	0.55	0.63	0.06	0.04	0.08	0.63	0.75	0.75	0.55
1 1/2"	40	0.63	0.37	5.00	8.36	8.80	8.58	0.56	0.81	0.71	0.63	0.71	0.06	0.08	0.08	0.63	0.87	0.75	0.71

Copyright © 2010 Tyco Flow Control. All rights reserved.

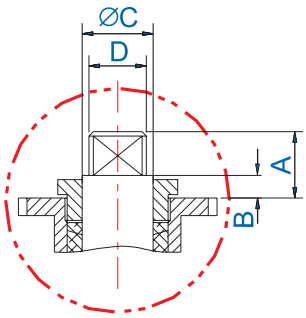

Detail G

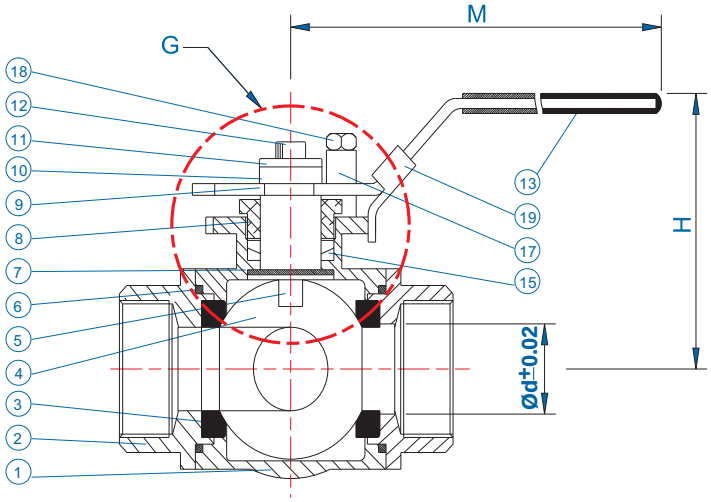

Features

- General purpose 1,000psi (PN63), ball valve
- Three-way multi-port ball valve with L or T port opions, 90° operation
- Investment cast body
- Stainless steel body, RPTFE seats
- Screwed end to : BSPP
  BSPT
  NPT
- ISO 5211 top mounting plate
- Blow-out proof stem
- Size range DN8 (1/4") to DN50 (2") - Reduced bore

Note:
For Pressure/Temperature charts, please refer to Page 31
For Flow Plan chart options, please refer to Page 37

Materials of Construction

No.	Parts Name	Material	Quantity
1	Body	CF8M / 1.4408	1
2	Cap	CF8M / 1.4408	2
3	Seat	RPTFE	4
4	Ball	ASTM A351 Gr. CF8M	1
5	Anti-Static Stem	A276 Type 316	1
6	Joint Gasket	PTFE	2
7	Thrust Washer	PTFE	1
8	Gland	304SS	1
9	Handle	304SS	1
10	Handle Washer	304SS	1-3
11	Washer	304SS	1
12	Handle Nut	304SS	1
13	Handle Sleeve	Vinyl	1
14	End Cap	CF8M / 1.4408	1
15	Stem Packings	PTFE	1 Set
16	End Cap Seal	PTFE	1
17	Gland Washer	304SS	1
18	Bolt	A2-70	1
19	Locking Device	304SS	1

Ball Port Configuration

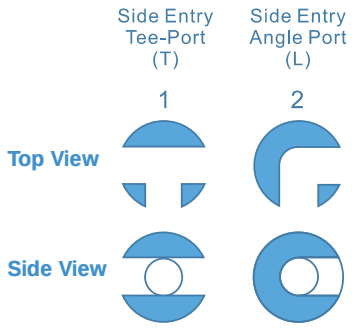

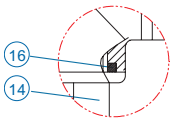

Detail K

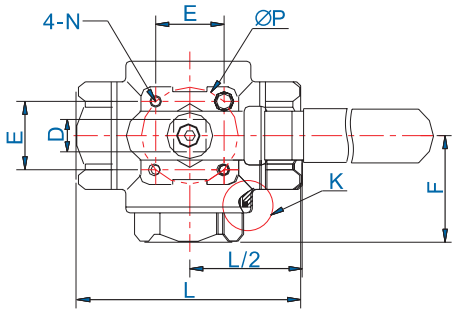

Dimensions (inches)

Size	DN	A	B	ØC	D	E	F	ØP	N	Ød±0.02	L±0.03	H±0.12	M±0.12	Wt (lbs)
1/4"	8	0.39	0.24	0.47	0.35	1.17	1.38	1.65	M5	0.43	2.72	2.28	5.24	1.32
3/8"	10	0.39	0.24	0.47	0.35	1.17	1.38	1.65	M5	0.43	2.72	2.28	5.24	1.32
1/2"	15	0.43	0.24	0.47	0.35	1.17	1.50	1.65	M5	0.50	2.95	2.52	5.24	1.48
3/4"	20	0.55	0.28	0.59	0.43	1.39	1.76	1.97	M6	0.63	3.39	3.24	7.09	2.65
1"	25	0.79	0.33	0.59	0.43	1.39	2.02	1.97	M6	0.79	4.03	3.39	7.09	3.75
1 1/4"	32	0.91	0.31	0.59	0.43	1.39	2.26	1.97	M6	0.98	4.65	3.60	8.27	5.29
1 1/2"	40	1.02	0.39	0.59	0.43	1.95	2.47	2.76	M8	1.26	4.92	4.04	8.27	7.50
2"	50	1.03	0.39	0.73	0.55	1.95	2.94	2.76	M8	1.50	5.87	4.33	8.98	12.13

Copyright © 2010 Tyco Flow Control. All rights reserved.

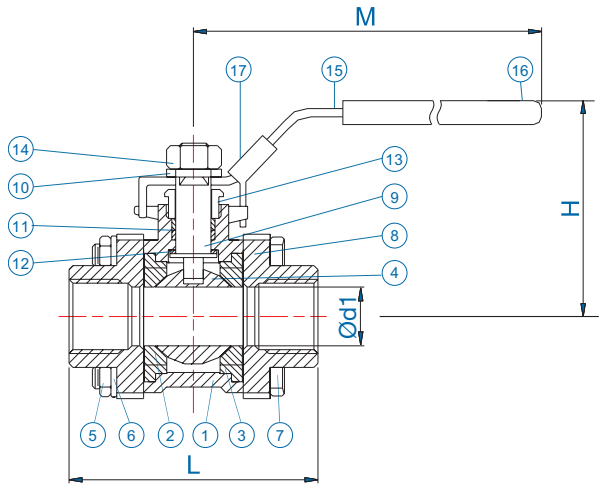

Materials of Construction

No.	Parts Name	Material	Quantity
1	Body	CF8M / WCB, 1.4408 / 1.0619	1
2	Body Seat	PTFE	2
3	Body Gasket	PTFE	2
4	Ball	ASTM A351 Gr. CF8M	1
5	Bolt Nut	304SS	4-12
6	Bolt Washer	304SS	4-12
7	Bolt	304SS	4-6
8	Cap	CF8M / WCB, 1.4408 / 1.0619	2*
9	Anti-Static Stem	A276 Type 316	1
10	Handle Washer	304SS	1
11	Stem Packing	PTFE	1
12	Thrust Washer	PTFE	1
13	Gland Nut	304SS	1
14	Stem Nut	304SS	1
15	Handle	304SS	1 Set
16	Handle Sleeve	Vinyl	1
17	Locking Device	304SS	1

*Stainless steel welded connectors are CF3M/1.4409

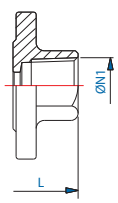

Threaded End

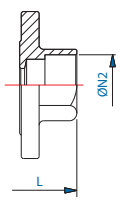

Socket Weld End

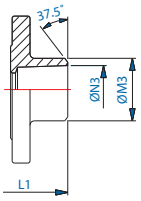

Butt Weld End

Dimensions (inches)

Size	DN	Ød1	L	L1	H	M	ØN2	ØN3	ØM3	Wt (lbs)
1/4"	8	0.46	2.36	2.40	2.13	4.06	0.56	0.46	0.71	0.75
3/8"	10	0.49	2.36	2.40	2.13	4.06	0.70	0.49	0.71	0.71
1/2"	15	0.59	2.72	2.72	2.17	5.24	0.86	0.67	0.89	1.23
3/4"	20	0.79	3.07	3.07	2.32	5.24	1.07	0.89	1.09	1.59
1"	25	0.98	3.31	3.31	2.76	6.02	1.33	1.02	1.32	2.25
1 1/4"	32	1.26	4.09	4.09	2.95	6.02	1.68	1.35	1.66	3.31
1 1/2"	40	1.50	4.65	4.69	3.31	7.52	1.92	1.63	1.92	5.25
2"	50	1.97	5.08	5.16	3.62	7.52	2.41	2.09	2.40	7.80
2 1/2"	65	2.56	6.38	6.38	5.04	9.72	2.92	2.59	3.03	15.70
3"	80	3.15	7.17	7.17	5.39	9.72	3.54	3.19	3.58	22.84
4"	100	3.94	9.06	9.06	6.81	11.61	4.55	4.02	4.53	42.11

ØN1 refer to thread options: BSPP, BSPT or NPT

Features

- General purpose 1,000psi (PN63)/600psi (PN40), ball valve
- Three-piece, swing out design
- Investment casting for body and end cap
- End connections screwed, butt weld and socket weld
- Blow-out proof stem
- Locking device
- Size range DN8 (1/4") to DN100 (4") - Full bore
- Tightness to EN12266-1

Note:
For Pressure/Temperature charts, please refer to Page 31

Copyright © 2010 Tyco Flow Control. All rights reserved.

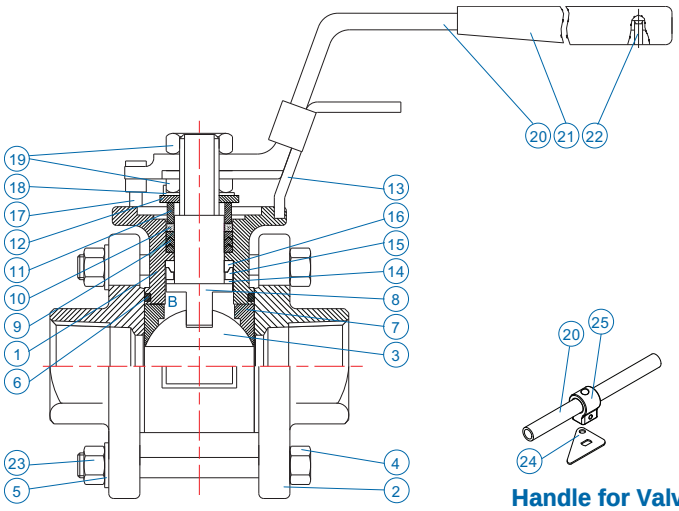

Sizes DN8 to DN80 (1/4" to 3")

Handle for Valve
Size DN65 to DN100 (2 1/2" to 4")

Features

- Patented "SEALMASTER" stem arrangement for 1/2" (full bore) and larger sizes
- Double stem seal design complies wth TA-LUFT fugitive emission requirements
- Three-piece swing out design
- Valve pressure rating:
  1/4" to 1 1/2" - Class 400#
  2" to 4" - Class 300#
- ISO 5211 top mounting plate
- End connections flanged, screwed, butt weld or socket weld
- Carbon steel or stainless steel bodies
- Size range DN8 (1/4") to DN100 (4") - Full bore
- Seat material options
- Blow-out proof stem and anti-static design
- Tightness to EN12266-1 Rate A

Note:
For Pressure/Temperature charts, please refer to Page 32

Materials of Construction

No.	Parts Name	Material	Quantity
1	Body	CF8M / WCB, 1.4408 / 1.0619	1
2	Cap	CF8M / WCB, 1.4408 / 1.0619	2*
3	Ball	ASTM A351 Gr. CF8M	1
4	Bolt	A2-70	4-6
5	Bolt Washer	304SS	4-12
6	Body Gasket	PTFE	2
7	Ball Seat	PTFE	2
8	Anti-Static Stem	A276 Type 316	1
9	V-Ring Stem Packing	PTFE	1 Set
10	Thrust Washer	50% SS Powder / 50% PTFE	1
11	Gland	304SS	1
12	Belleville Washer	301SS	2
13	Locking Trigger	Stainless Steel	1
14	Lower Stem Seal	50% SS Powder / 50% PTFE	1
15	Compress Ring	316L SS	1
16	Upper Stem Seal	TFM1600	1
17	Stop Bolt	Stainless Steel	1
18	Lock Saddle	Stainless Steel	1
19	Stem Nut	304SS	1-2
20	Handle	CF8 / SGP Zn Plating	1
21	Handle Sleeve	Vinyl	1
22	Rivet	304SS	2
23	Bolt Nut	A2-70	4-12
24	Triangle Stopper	Stainless Steel	1
25	Handle Adapter	CF8	1

* Stainless steel welded connectors are CF3M1.4409

Copyright © 2010 Tyco Flow Control. All rights reserved.

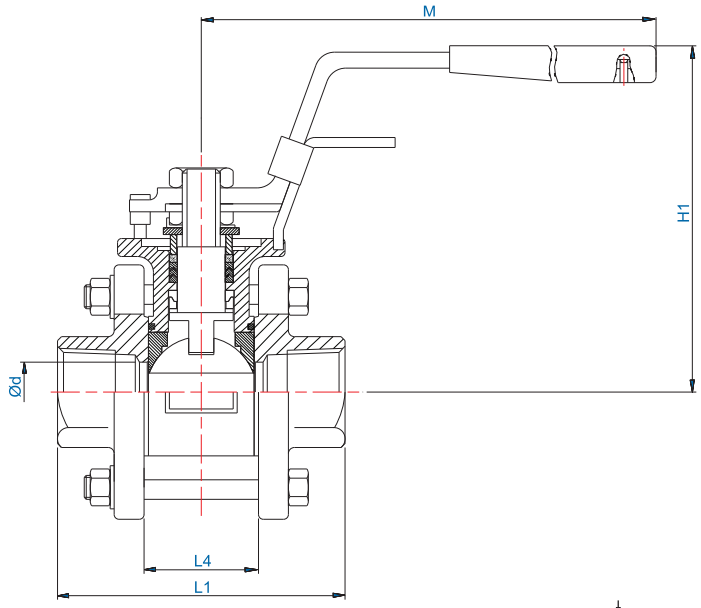

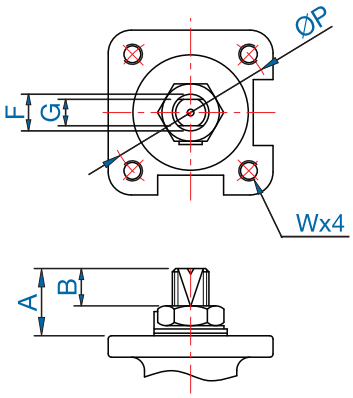

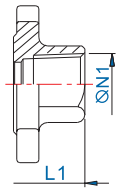

Threaded End

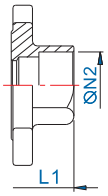

Socket Weld

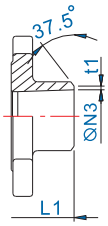

Butt Weld

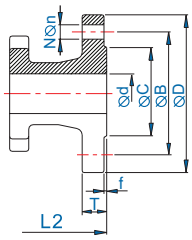

Flange End (PN25/40 F1)

Dimensions (inches)

Size	DN	A	B	G	ØP	F	W	Wt (lbs) Threaded SW, BW
1/4"	8	0.47	0.24	0.20	1.42	0.31	M5	0.97
3/8"	10	0.47	0.24	0.20	1.42	0.31	M5	0.97
1/2"	15	0.78	0.49	0.25	1.65	0.38	M5	0.97
3/4"	20	0.79	0.49	0.25	1.65	0.38	M5	2.09
1"	25	0.83	0.54	0.31	1.97	0.44	M6	3.09
1 1/4"	32	0.84	0.52	0.31	1.97	0.44	M6	4.19
1 1/2"	40	0.97	0.55	0.37	2.76	0.63	M8	6.79
2"	50	0.99	0.55	0.37	2.76	0.63	M8	10.36
2 1/2"	65	1.64	1.03	0.59	4.02	0.75	M10	19.62
3"	80	1.65	1.00	0.59	4.02	0.75	M10	31.09
4"	100	1.88	1.15	0.67	4.02	1.13	M10	48.50

Size	DN	Ød	M	H1	L4	L1	L2	N	t1	T	f	Øn	ØD	ØB	ØC	ØN2	ØN3	Wt (lbs) PN25/40 Flange
1/4"	8	0.46	5.31	2.58	0.83	2.56	N/A	N/A	0.03	N/A	N/A	N/A	N/A	N/A	N/A	0.56	0.46	N/A
3/8"	10	0.50	5.31	2.60	0.83	2.56	N/A	N/A	0.03	N/A	N/A	N/A	N/A	N/A	N/A	0.69	0.50	N/A
1/2"	15	0.59	5.31	3.27	1.04	2.84	5.12	4	0.03	0.63	0.08	0.55	3.74	2.56	1.77	0.85	0.62	4.94
3/4"	20	0.79	5.31	3.39	1.31	3.35	5.91	4	0.04	0.71	0.08	0.55	4.13	2.95	2.28	1.07	0.82	6.70
1"	25	0.98	6.50	3.78	1.48	3.62	6.30	4	0.06	0.71	0.08	0.55	4.53	3.35	2.68	1.33	1.05	8.60
1 1/4"	32	1.26	6.50	4.02	1.84	4.33	7.09	4	0.06	0.71	0.08	0.71	5.51	3.94	3.07	1.68	1.38	13.78
1 1/2"	40	1.50	7.87	4.53	2.28	4.84	7.87	4	0.06	0.71	0.08	0.71	5.91	4.33	3.46	1.91	1.61	15.76
2"	50	2.00	7.87	4.88	2.74	5.59	9.06	4	0.06	0.79	0.08	0.71	6.50	4.92	4.02	2.41	2.07	22.38
2 1/2"	65	2.56	9.84	6.30	3.41	6.85	11.42	8	0.08	0.87	0.08	0.71	7.28	5.71	4.80	3.04	2.47	36.64
3"	80	2.99	9.84	6.69	4.04	7.60	12.20	8	0.08	0.94	0.08	0.71	7.87	6.30	5.43	3.55	3.07	52.47
4"	100	3.83	19.69	7.17	4.94	8.72	13.78	8	0.08	0.94	0.06	0.87	9.25	7.48	6.38	4.53	4.11	78.48

ØN1 refer to thread options: BSPP, BSPT, NPT, DIN 2999
N/A = Not Available

Copyright © 2010 Tyco Flow Control. All rights reserved.

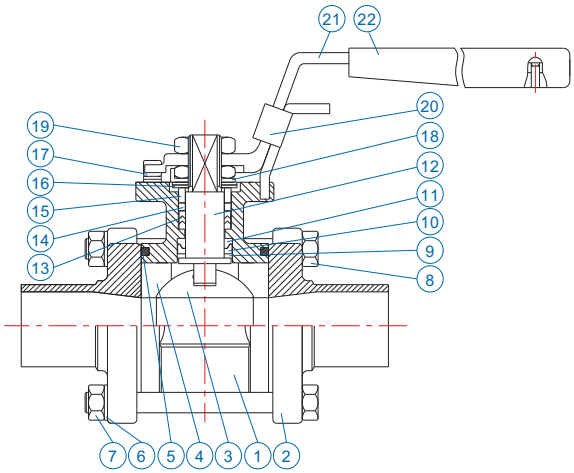

Sizes DN15 to DN80 (1/2" to 3")

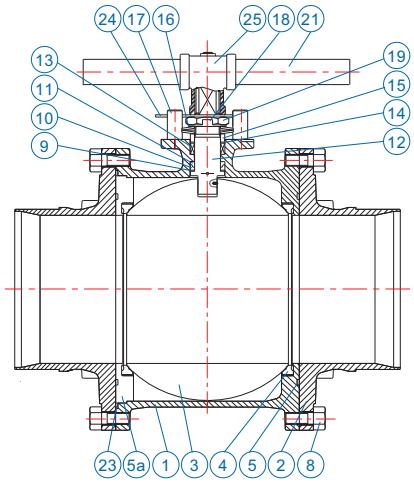

Sizes DN100 to DN300 (4" to 12")

Features

- Patented "SEALMASTER" stem arrangement
- Double stem seal design complies wth TA-LUFT fugitive emission requirements
- Blow-out proof stem
- ISO 5211 top mounting plate
- Three-piece swing out design
- Valve pressure rating:
  1/2" to 1 1/2" - Class 400#
  2" to 4" - Class 300#
  5" to 12" - Class 150#
- End connections butt weld, tubing and tri-clamp
- All wetted parts are polished to 180 Grit (0.51 to 0.64 micron)
- All extended weld ends in CF3M/DIN 1.4409 material allows orbital welding in place
- High purity cleaning (oil free) and packing
- Bosses for purge connections are built into the end caps
- Size range DN15 (1/2") to DN300 (12")
- Helium leak detection calibrated to $1x10^{-5}$ std cc/sce

Note:
For Pressure/Temperature charts, please refer to Page 32

Materials of Construction

No.	Parts Name	Material	Quantity
1	Body	CF8M / 1.4408	1
2	Cap	CF3M / 1.4409	2
3	Ball	ASTM A351 Gr. CF8M	1
4	Ball Seat	PTFE	2
5	Body Seal	PTFE	2
5a	Seat Ring	ASTM A351 Gr. CF8M (5" to 12")	1
6	Bolt Washer	304SS	4-12
7	Bolt Nut	A2-70	4-12
8	Bolt	A2-70	*
9	Lower Thrust Washer	50% SS Powder / 50% PTFE	1
10	Compress Ring	316L SS (1/2" to 4") / 316 SS (5" to 12")	1
11	Upper Thrust Washer	TFM1600	1
12	Anti-Static Stem	A276 Type 316	1
13	V-Ring Stem Packing	PTFE	1 Set
14	Thrust Washer	50% SS Powder / 50% PTFE	1
15	Gland	304SS	1
16	Belleville Washer	301SS	2
17	Stop Bolt	Stainless Steel	1-2
18	Lock Saddle	Stainless Steel	1
19	Stem Nut	304SS	1-2
20	Locking Trigger	Stainless Steel	1
21	Handle	CF8 / SGP Zn Plating	1
22	Handle Sleeve	Vinyl	1
23	Cap Seal	PTFE	1
24	Triangle Stopper	Stainless Steel (2 1/2" to 12")	1
25	Handle Adapter	CF8 (2 1/2" to 5") / A536 (6" to 12")	1

* 1/2" to 2 1/2" x 4pcs, 3" to 4" x 6pcs, 5" x 20pcs, 6" x 28pcs, 8" x 24pcs, 10" to 12" x 40pcs

Copyright © 2010 Tyco Flow Control. All rights reserved.

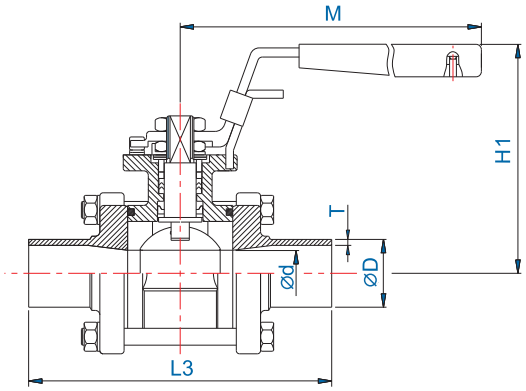

Extended Butt Weld (1/2" to 3")
SCH#5 / SCH#10

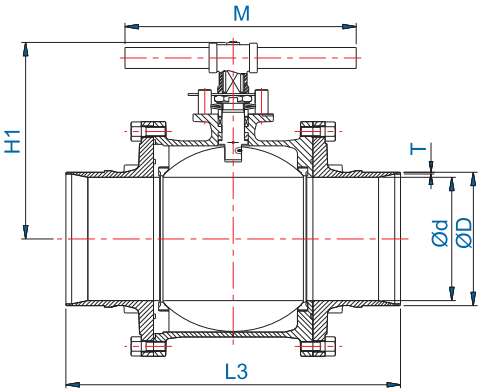

Extended Butt Weld (4" to 12")
SCH#5 / SCH#10

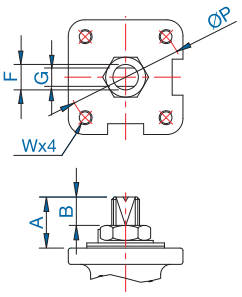

DN15 to DN100 (1/2" to 4")

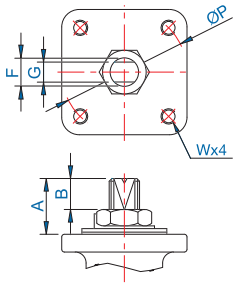

DN125 to DN200 (5" to 8")

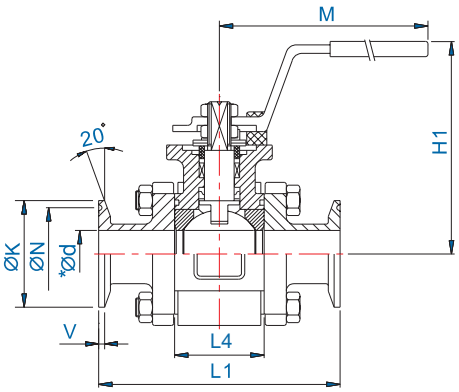

T-clamp

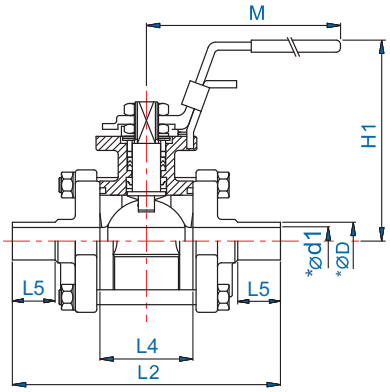

Orbital Tubing

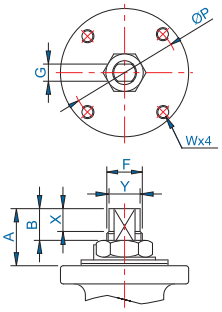

DN250 to DN300 (10" to 12")

Dimensions (inches)

Size	DN	V	L1	L2	L4	L5	ØK	ØN	*Ød	*Ød1	*ØD	Wt (lbs) T-Clamp
1/2"	15	0.14	3.66	5.50	1.04	1.38	0.98	0.80	0.37	0.40	0.50	1.65
3/4"	20	0.14	4.14	5.50	1.31	1.42	0.98	0.80	0.62	0.62	0.75	2.25
1"	25	0.11	4.48	6.33	1.48	1.50	1.98	1.72	0.87	0.87	1.00	3.40
1 1/2"	40	0.11	4.92	7.50	2.28	1.81	1.98	1.72	1.37	1.37	1.50	N/A
2"	50	0.11	5.75	8.00	2.74	1.81	2.52	2.22	1.87	1.87	2.00	6.79
2 1/2"	65	0.11	6.85	10.00	3.41	2.20	3.05	2.78	2.37	2.37	2.50	10.01
3"	80	0.11	7.60	10.98	4.04	2.36	3.58	3.28	2.87	2.87	3.00	20.55
4"	100	0.11	8.64	12.09	4.94	2.36	4.68	4.34	3.83	3.83	4.00	28.99

Size	DN	A	B	G	ØP	W	F	Ød	T 5S	T 10S	ØD	M	H1	L3	Wt (lbs) Ext.BW	X	Y
1/2"	15	0.78	0.49	0.25	1.65	M5	0.38	0.59	0.06	0.08	0.85	5.31	3.23	5.50	2.16	-	-
3/4"	20	0.79	0.49	0.25	1.65	M5	0.38	0.79	0.06	0.08	1.07	5.31	3.39	5.50	2.60	-	-
1"	25	0.83	0.54	0.31	1.97	M6	0.44	0.98	0.06	0.11	1.34	6.50	3.86	6.07	3.97	-	-
1 1/4"	32	0.84	0.52	0.31	1.97	M6	0.44	1.26	0.06	0.11	1.68	6.50	3.94	6.50	5.82	-	-
1 1/2"	40	0.97	0.55	0.37	2.76	M8	0.63	1.50	0.06	0.11	1.91	7.87	4.57	7.50	8.60	-	-
2"	50	0.99	0.55	0.37	2.76	M8	0.63	2.00	0.06	0.11	2.38	7.87	4.92	8.00	11.95	-	-
2 1/2"	65	1.64	1.03	0.59	4.02	M10	0.75	2.56	0.08	0.12	3.00	9.84	6.30	10.00	22.97	-	-
3"	80	1.65	1.00	0.59	4.02	M10	0.75	2.99	0.08	0.12	3.51	9.84	6.73	11.00	34.70	-	-
4"	100	1.88	1.15	0.67	4.02	M10	1.13	3.83	0.08	0.12	4.50	23.43	8.03	12.50	50.84	-	-
5"	125	2.11	1.30	0.67	4.02	M10	1.13	4.92	0.11	0.13	5.50	23.43	8.90	15.00	108.03	-	-
6"	150	2.56	1.54	0.91	4.92	M12	1.34	5.91	0.11	0.13	6.50	31.50	11.06	15.87	167.55	-	-
8"	200	2.56	1.54	0.91	4.92	M12	1.34	7.87	0.11	0.16	8.52	43.31	12.48	20.51	299.83	-	-
10"	250	3.29	2.05	1.18	5.51	M16	1.97	9.84	0.13	0.16	10.53	43.31	14.88	22.01	337.31	1.57	1.85
12"	300	3.29	2.05	1.18	5.51	M16	1.97	11.81	0.16	0.18	12.54	43.31	16.54	25.00	901.69	1.57	1.85

Copyright © 2010 Tyco Flow Control. All rights reserved.

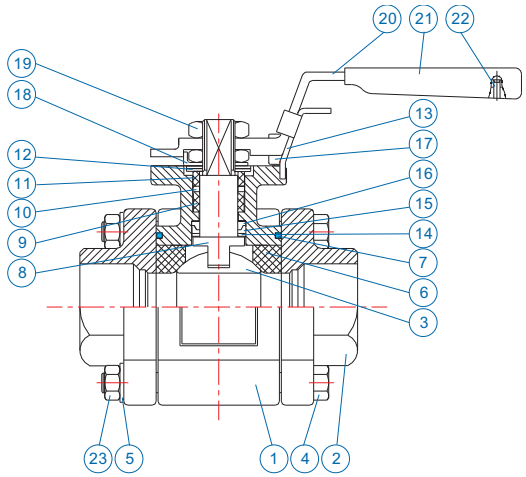

Sizes DN8 to DN80 (1/4" to 3")

Features

- Patented "SEALMASTER" stem arrangement for 1/2" (full bore) and larger sizes
- Double stem seal design complies wth TA-LUFT fugitive emission requirements
- Heavy duty, three piece ball valve
- ISO 5211 top mounting plate
- Valve pressure rating:
  1/4" to 2" - Class 400#
  2 1/2" to 3" - Class 300#
- Fully enclosed bolting for sizes up to DN40 full bore
- End connections, screwed, butt weld and socket weld
- Seat material options
- Size range DN8 (1/4") to DN100 (4") - Full and reduced bore
- Blow-out proof stem and anti-static design
- Tightness to EN12266-1 Rate A
- Optional casting per AD2000-WO

Note:
For Pressure/Temperature charts, please refer to Page 32

Materials of Construction

No.	Parts Name	Material	Quantity
1	Body	CF8M / WCB, 1.4408 / 1.0619	1
2	Cap	CF8M / WCB, 1.4408 / 1.0619	2*
3	Ball	ASTM A351 Gr. CF8M	1
4	Bolt	A2-70	4-6
5	Bolt Washer	304SS	4-12
6	Ball Seat	RPTFE	2
7	Body Gasket	PTFE	2
8	Anti-Static Stem	A276 Type 316	1
9	V-Ring Stem Packing	PTFE	1 Set
10	Thrust Washer	50% SS Powder / 50% PTFE	1
11	Gland	304SS	1
12	Belleville Washer	301SS	2
13	Locking Trigger	Stainless Steel	1
14	Lower Stem Seal	50% SS Powder / 50% PTFE	1
15	Compress Ring	316L SS	1
16	Upper Stem Seal	TFM1600	1
17	Stop Bolt	Stainless Steel	1
18	Lock Saddle	Stainless Steel	1
19	Stem Nut	304SS	2
20	Handle	CF8 / SGP Zn Plating	1
21	Handle Sleeve	Vinyl	1
22	Rivet	304SS	2
23	Bolt Nut	A2-70	4-12

* Stainless steel welded connectors are CF3M/1.4409

Copyright © 2010 Tyco Flow Control. All rights reserved.

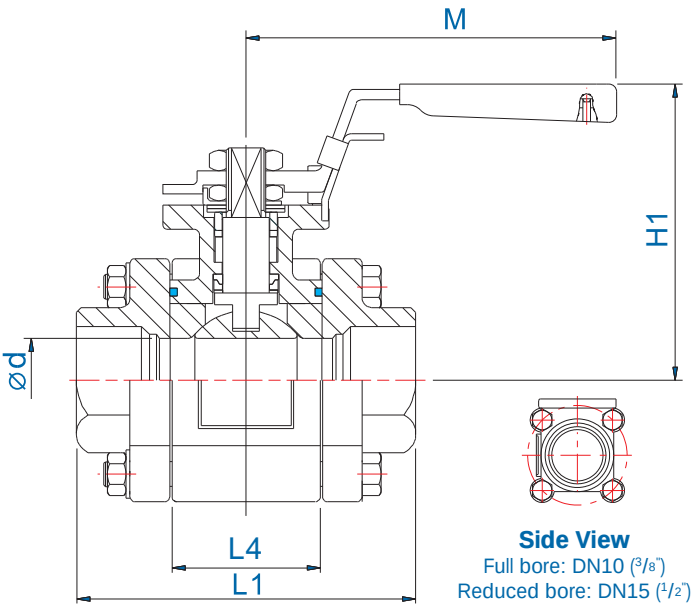

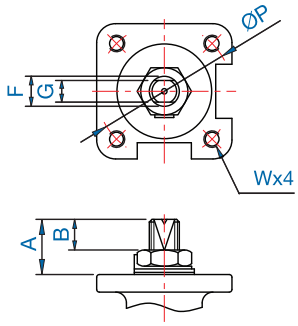

Side View
Full bore: DN10 (3/8")
Reduced bore: DN15 (1/2")

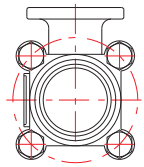

Side View
Full bore: DN15 to DN40 (1/2" to 1 1/2")
Reduced bore: DN20 to DN50 (3/4" to 2")

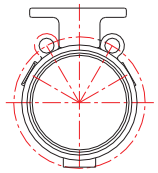

Side
Full bore: DN50 to DN80 (2" to 3")
Reduced bore: DN65 to DN100 (2 1/2" to 4")

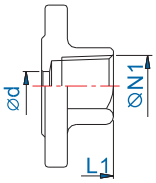

Threaded End

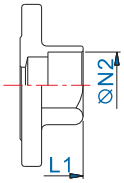

Socket Weld

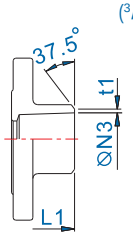

Butt Weld

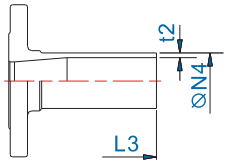

SCH#5 (FP) / SCH#10 (FP)

Full Bore Dimensions (inches)

Size	DN	Ød	A	B	G	ØP	F	W	M	t1	t2 5s	t2 10s	L1	L3	L4	ØN2	ØN3	ØN4	H1	Wt (lbs)
1/4"	8	0.44	0.48	0.22	0.20	1.42	0.31	M5	4.53	0.02	N/A	N/A	2.62	N/A	0.83	0.56	0.36	N/A	2.60	1.37
3/8"	10	0.50	0.48	0.22	0.20	1.42	0.31	M5	4.53	0.02	N/A	N/A	2.62	N/A	0.83	0.69	0.49	N/A	2.60	1.32
1/2"	15	0.59	0.59	0.37	0.25	1.65	0.38	M5	5.31	0.02	0.06	0.08	2.82	5.11	0.99	0.88	0.62	0.85	3.31	1.81
3/4"	20	0.79	0.79	0.49	0.25	1.65	0.38	M5	5.31	0.02	0.06	0.08	3.80	5.55	1.27	1.08	0.83	1.07	3.46	3.13
1"	25	0.98	0.84	0.53	0.31	1.97	0.44	M6	6.50	0.02	0.06	0.11	4.29	8.79	1.67	1.35	1.05	1.34	3.86	4.45
1 1/4"	32	1.25	0.85	0.54	0.31	1.97	0.44	M6	6.50	0.02	0.06	0.11	4.61	9.07	1.94	1.69	1.38	1.68	3.98	6.08
1 1/2"	40	1.50	1.01	0.61	0.37	2.76	0.63	M8	7.87	0.02	0.06	0.11	5.08	9.46	2.25	1.93	1.61	1.91	4.61	9.08
2"	50	2.00	0.99	0.64	0.37	2.76	0.63	M8	7.87	0.04	0.06	0.11	5.59	10.21	2.81	2.41	2.07	2.38	4.92	13.23
2 1/2"	65	2.56	1.68	0.99	0.67	4.02	0.88	M10	9.84	0.04	N/A	N/A	6.85	N/A	3.50	3.04	2.71	N/A	6.50	20.90
3"	80	3.15	1.55	0.98	0.67	4.02	0.88	M10	9.84	0.06	N/A	N/A	7.60	N/A	4.27	3.55	3.07	N/A	6.85	34.48

ØN1 refer to thread options: NPT, BSPT, BSPP, DIN 2999
N/A = Not Available

Reduced Bore Dimensions (inches)

Size	DN	Ød	A	B	G	ØP	F	W	M	t1	L1	L4	ØN2	ØN3	H1	Wt (lbs)
1/2"	15	0.50	0.48	0.22	0.20	1.42	0.31	M5	4.53	0.02	2.62	0.83	0.88	0.62	2.60	1.39
3/4"	20	0.59	0.59	0.37	0.25	1.65	0.38	M5	5.31	0.02	2.82	0.99	1.08	0.83	3.31	1.87
1"	25	0.79	0.79	0.49	0.25	1.65	0.38	M5	5.31	0.02	3.80	1.27	1.35	1.05	3.35	3.26
1 1/4"	32	0.98	0.84	0.53	0.31	1.97	0.44	M6	6.50	0.02	4.29	1.67	1.69	1.38	3.86	4.59
1 1/2"	40	1.25	0.85	0.54	0.31	1.97	0.44	M6	6.50	0.02	4.61	1.94	1.93	1.61	3.98	6.22
2"	50	1.50	1.01	0.61	0.37	2.76	0.63	M8	7.87	0.04	5.08	2.25	2.41	2.07	4.61	9.52
2 1/2"	65	2.00	0.99	0.64	0.37	2.76	0.63	M8	7.87	0.04	5.59	2.81	3.04	2.71	4.92	12.99
3"	80	2.56	1.68	0.99	0.67	4.02	0.88	M10	9.84	0.06	6.85	3.50	3.55	3.07	6.50	21.23
4"	100	3.15	1.55	0.98	0.67	4.02	0.88	M10	9.84	0.06	7.60	4.27	4.53	4.03	6.85	34.04

ØN1 refer to thread options: NPT, BSPT, BSPP, DIN 2999
N/A = Not Available

Copyright © 2010 Tyco Flow Control. All rights reserved.

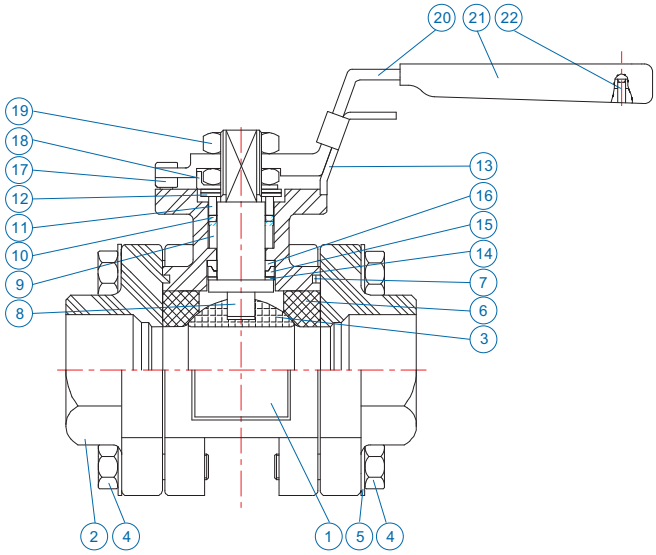

Features

- Patented "SEALMASTER" stem arrangement for 1/2" (full bore) and larger sizes
- Double stem seal design
- Blow-out proof stem
- ISO 5211 top mounting plate
- Anti-static design
- Valve pressure rating:
  1/4" to 2" - Class 400#
  2 1/2" to 3" - Class 300#
- End connections, screwed, butt weld and socket weld
- Secondary metal to metal seating surface
- Fire tested to API 607 4th edition up to DN80 (3")
- Size range DN8 (1/4") to DN100 (4") - Full and reduced bore
- Tightness to EN12266-1 Rate A
- Optional casting per AD2000-WO

Note:
For Pressure/Temperature charts, please refer to Page 32

Materials of Construction

No.	Parts Name	Material	Quantity
1	Body	CF8M / WCB, 1.4408 / 1.0619	1
2	Cap	CF8M / WCB, 1.4408 / 1.0619	2*
3	Ball	ASTM A351 Gr. CF8M	1
4	Bolt	A2-70	8-12
5	Bolt Washer	304SS	8-12
6	Ball Seat	RPTFE	2
7	Body Gasket	Graphite	2
8	Anti-Static Stem	A276 Type 316	1
9	Stem Packing	Graphite	1 Set
10	Thrust Washer	50% SS Powder / 50% PTFE	1
11	Gland	304SS	1
12	Belleville Washer	301SS	2
13	Locking Trigger	Stainless Steel	1
14	Lower Stem Seal	50% SS Powder / 50% PTFE	1
15	Compress Ring	316L SS	1
16	Upper Stem Seal	Graphite	1
17	Stop Bolt	Stainless Steel	1
18	Lock Saddle	Stainless Steel	1
19	Stem Nut	304SS	2
20	Handle	CF8	1
21	Handle Sleeve	Vinyl	1
22	Rivet	304SS	2

* Stainless steel welded connectors are CF3M/1.4409

Copyright © 2010 Tyco Flow Control. All rights reserved.

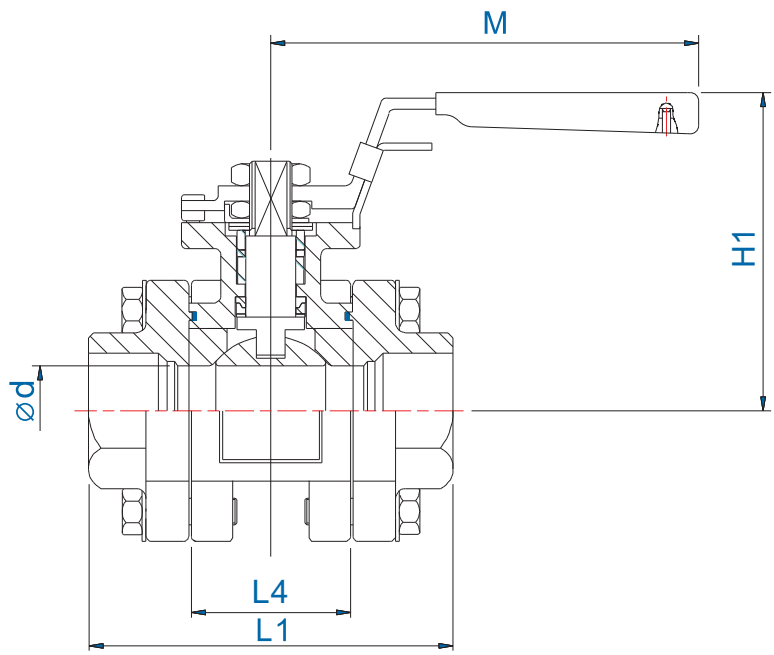

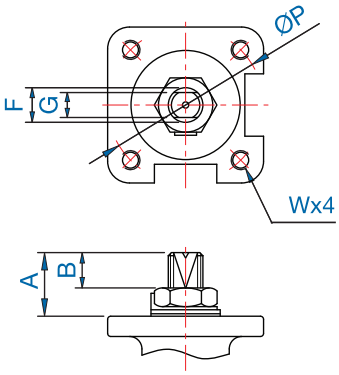

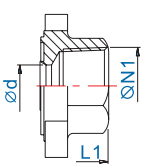

Threaded End

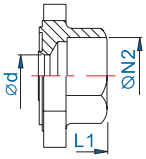

Socket Weld

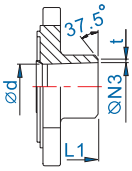

Butt Weld

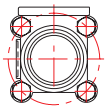

Side View
Full bore: DN10 (3/8")
Reduced bore: DN15 (1/2")

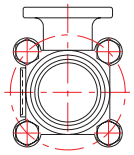

Side View
Full bore: DN15 to DN40
(1/2" to 1 1/2")
Reduced bore: DN20 to DN50
(3/4" to 2")

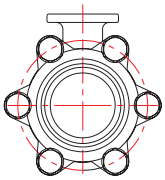

Side View
Full bore: DN50 to DN80
(2" to 3")
Reduced bore: DN65 to DN80
(2 1/2" to 3")

Full Bore Dimensions (inches)

Size	DN	Ød	A	B	G	ØP	F	W	H1	L1	L4	M	ØN2	ØN3	t	Wt (lbs)
1/4"	8	0.44	0.50	0.22	0.20	1.42	0.31	M5	2.60	2.62	0.83	4.53	0.56	0.36	0.02	1.37
3/8"	10	0.50	0.50	0.22	0.20	1.42	0.31	M5	2.60	2.62	0.83	4.53	0.69	0.49	0.02	1.37
1/2"	15	0.59	0.59	0.37	0.25	1.65	0.38	M5	3.31	2.82	0.99	5.31	0.88	0.62	0.02	1.94
3/4"	20	0.79	0.79	0.49	0.25	1.65	0.38	M5	3.46	3.80	1.27	5.31	1.08	0.83	0.02	3.09
1"	25	0.98	0.84	0.53	0.31	1.97	0.44	M6	3.86	4.29	1.67	6.50	1.35	1.05	0.02	4.32
1 1/4"	32	1.25	0.85	0.54	0.31	1.97	0.44	M6	3.98	4.61	1.94	6.50	1.69	1.38	0.02	6.00
1 1/2"	40	1.50	1.01	0.61	0.37	2.76	0.63	M8	4.61	5.08	2.25	7.87	1.93	1.61	0.02	8.91
2"	50	2.00	0.95	0.60	0.37	2.76	0.63	M8	4.92	5.59	2.81	7.87	2.41	2.07	0.04	14.46
2 1/2"	65	2.56	1.66	0.97	0.67	4.02	0.88	M10	6.50	6.85	3.50	9.84	3.04	2.71	0.04	N/A
3"	80	3.15	1.39	0.98	0.67	4.02	0.88	M10	6.85	7.60	4.27	9.84	3.55	3.07	0.06	N/A

ØN1 refer to thread options: NPT, BSPT, BSPP, DIN 2999
N/A = Not Available

Reduced Bore Dimensions (inches)

Size	DN	Ød	A	B	G	ØP	F	W	H1	L1	L4	M	ØN2	ØN3	t
1/2"	15	0.50	0.50	0.22	0.20	1.42	0.31	M5	2.60	2.62	0.83	4.53	0.88	0.62	0.02
3/4"	20	0.59	0.59	0.37	0.25	1.65	0.38	M5	3.31	2.82	0.99	5.31	1.08	0.83	0.02
1"	25	0.79	0.79	0.49	0.25	1.65	0.38	M5	3.46	3.80	1.27	5.31	1.35	1.05	0.02
1 1/4"	32	0.98	0.84	0.53	0.31	1.97	0.44	M6	3.86	4.29	1.67	6.50	1.69	1.38	0.02
1 1/2"	40	1.25	0.85	0.54	0.31	1.97	0.44	M6	3.98	4.61	1.94	6.50	1.93	1.61	0.02
2"	50	1.50	1.01	0.61	0.37	2.76	0.63	M8	4.61	5.08	2.25	7.87	2.41	2.07	0.04
2 1/2"	65	2.00	0.95	0.60	0.37	2.76	0.63	M8	4.92	5.59	2.81	7.87	3.04	2.71	0.04
3"	80	2.56	1.66	0.97	0.67	4.02	0.88	M10	6.50	6.85	3.50	9.84	3.55	3.07	0.06
4"	100	3.15	1.39	0.98	0.67	4.02	0.88	M10	6.85	7.60	4.27	9.84	4.53	4.15	0.06

ØN1 refer to thread options: NPT, BSPT, BSPP, DIN 2999
N/A = Not Available

Copyright © 2010 Tyco Flow Control. All rights reserved.

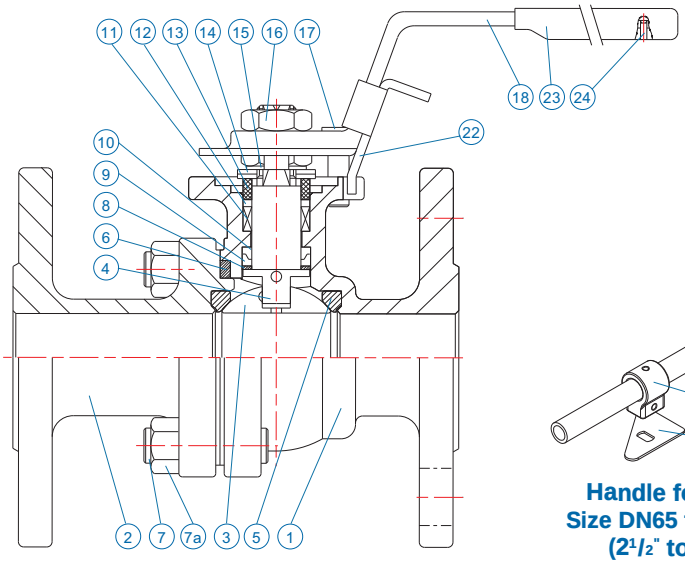

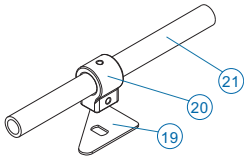

Handle for Valve Size DN65 to DN300 (2½" to 12")

Features

- Patented "SEALMASTER" stem arrangement
- Double stem seal design complies wth TA-LUFT fugitive emission requirements
- Blow-out proof stem
- ISO 5211 mounting plate
- Anti-static design according to EN1983/ISO 17292/BS5351
- Valve pressure rating:
  ANSI Class 150/300
  DIN PN10/16/25/40
  JIS 10K/20K
- Two-piece, split-body ball valve with flanged ends
- Carbon steel or stainless steel bodies
- Locking device
- Various seat material options
- Investment cast body (DN15 to DN100)
- Sand cast body (DN125 to DN300)
- Size range DN15 (½") to DN300 (12") - Full bore
- Tightness to EN12266-1 Rate A
- Optional casting per AD2000-WO

Note:
For Pressure/Temperature charts, please refer to Page 33 & 34

Materials of Construction

No.	Parts Name	Material	Quantity
*1	Body	ASTM A351 Gr. CF8M / ASTM A216 Gr. WCB	1
*2	Cap	ASTM A351 Gr. CF8M / ASTM A216 Gr. WCB	1
3	Ball	ASTM A351 Gr. CF8M	1
4	Anti-Static Stem	A276 Type 316	1
5	Ball Seat	PTFE / TFM1600	2
6	Body Seal	PTFE / TFM1600	1
7	Stud	A193 Gr. B8 / A193 Gr. B7	4-26
7a	Nut	A194 Gr. 8 / A194 Gr. 2H	4-26
8	Lower Stem Seal	50% SS Powder / 50% PTFE	1
9	Compress Ring	316L SS (½" to 4") / 316 SS (5" to 12")	1
10	Upper Stem Seal	TFM1600	1
11	V-Ring Stem Packing	PTFE	1 Set
12	Thrust Washer	50% SS Powder / 50% PTFE	1
13	Gland	304SS	1
14	Belleville Washer	301SS	2
15	Lock Saddle	Stainless Steel	1
16	Stem Nut	304SS	1-2
17	Stop Bolt	Stainless Steel	1-2
18	Handle (½" to 2")	CF8	1
19	Triangle Stopper (2½" to 12")	Stainless Steel	1
20	Handle Adapter (2½" to 12")	CF8 (2½" to 5") / A536 (6" to 12")	1
21	Handle (2½" to 12")	SGP Zn Plating	1
22	Locking Trigger	Stainless Steel	1
23	Handle Sleeve	Vinyl	1
24	Rivet	304SS	2

* For DIN valves, the body & cap material will be 1.4408/1.0619.
* For JIS valves, the body & cap material will be SCS14A/SCPH2.

Copyright © 2010 Tyco Flow Control. All rights reserved.

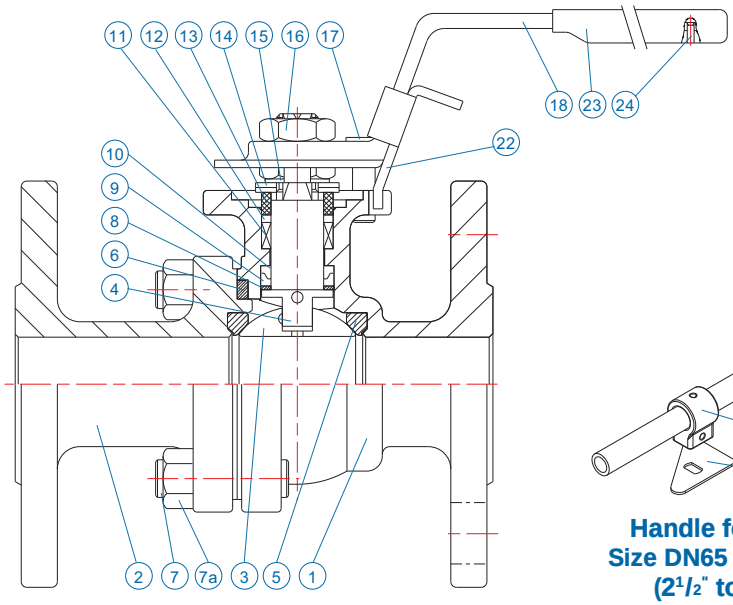

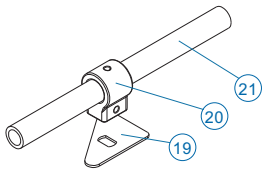

Handle for Valve Size DN65 to DN300 (2½" to 12")

Materials of Construction

No.	Parts Name	Material	Quantity
*1	Body	ASTM A351 Gr. CF8M / ASTM A216 Gr. WCB	1
*2	Cap	ASTM A351 Gr. CF8M / ASTM A216 Gr. WCB	1
3	Ball	ASTM A351 Gr. CF8M	1
4	Anti-Static Stem	A276 Type 316	1
5	Ball Seat	PTFE / TFM1600	2
6	Body Seal	Graphite (½" to 4") / 316SS Spiral Wound Graphite (5" to 12")	1
7	Stud	A193 Gr. B8 / A193 Gr. B7	4-26
7a	Nut	A194 Gr. 8 / A194 Gr. 2H	4-26
8	Lower Stem Seal	50% SS Powder / 50% PTFE	1
9	Compress Ring	316L SS (½" to 4") / 316 SS (5" to 12")	1
10	Upper Stem Seal	Graphite	1
11	Stem Packing	Graphite	1 Set
12	Thrust Washer	50% SS Powder / 50% PTFE	1
13	Gland	304SS	1
14	Belleville Washer	301SS	2
15	Lock Saddle	Stainless Steel	1
16	Stem Nut	304SS	1-2
17	Stop Bolt	Stainless Steel	1-2
18	Handle (½" to 2")	CF8	1
19	Triangle Stopper (2½" to 12")	Stainless Steel	1
20	Handle Adapter (2½" to 12")	CF8 (2½" to 5") / A536 (6" to 12")	1
21	Handle (2½" to 12")	SGP Zn Plating	1
22	Locking Trigger	Stainless Steel	1
23	Handle Sleeve	Vinyl	1
24	Rivet	304SS	2

* For DIN valves, the body & cap material will be 1.4408/1.0619.
* For JIS valves, the body & cap material will be SCS14A/SCPH2.

Features

- Patented "SEALMASTER" stem arrangement
- Double stem seal design
- Blow-out proof stem
- ISO 5211 mounting plate
- Anti-static design according to EN1983/ISO 17292/BS5351
- Valve pressure rating:
  ANSI Class 150/300
  DIN PN10/16/25/40
  JIS 10K/20K
- Two-piece, split-body ball valve
- Flexible graphite body and stem packing for Hi-temp resistance
- Secondary metal to metal seating surface
- Fire tested to API 607 4th edition up to DN300 (12")
- Size range DN15 (½") to DN300 (12") - Full bore
- Tightness to EN12266-1 Rate A

Note:
For Pressure/Temperature charts, please refer to Page 33 & 34

Copyright © 2010 Tyco Flow Control. All rights reserved.

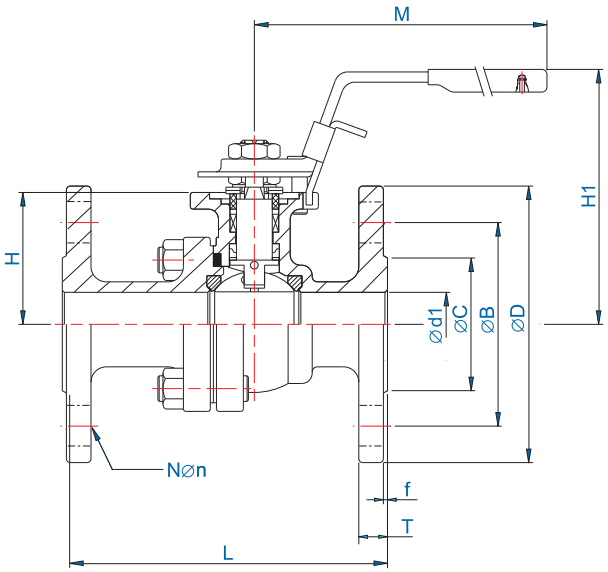

Size DN15 to DN50 (1/2" to 2")

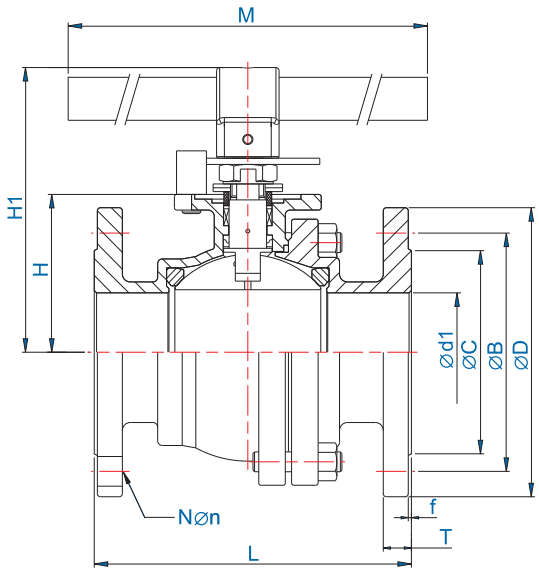

Size DN65 to DN300 (2 1/2" to 12")

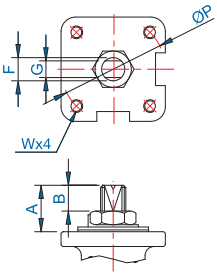

DN15 to DN100 (1/2" to 4")

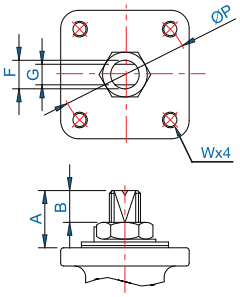

DN125 to DN200 (5" to 8")

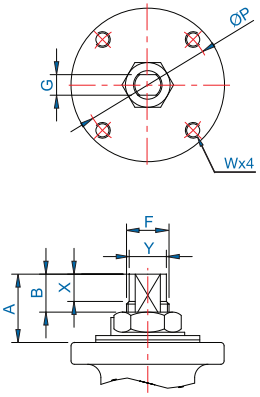

DN250 to DN300 (10" to 12")

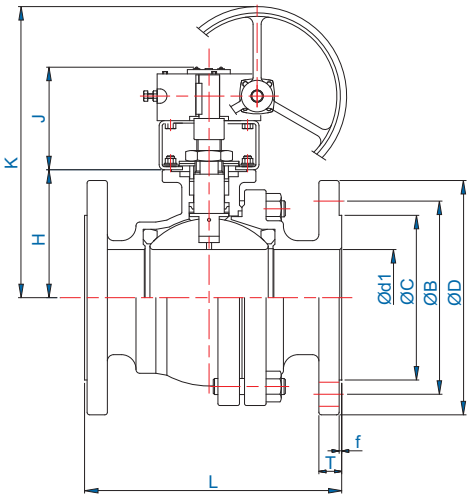

Size DN125 to DN300 (5" to 12")
Optional

Dimensions (inches)

Size	DN	A	ØP	F	G	B	W	M	H	H1	J	K	X	Y
1/2"	15	0.80	1.65	0.38	0.25	0.47	M5	5.31	1.52	3.23	N/A	N/A	-	-
3/4"	20	0.81	1.65	0.38	0.25	0.49	M5	5.31	1.65	3.39	N/A	N/A	-	-
1"	25	0.85	1.97	0.44	0.31	0.55	M6	6.50	2.03	3.86	N/A	N/A	-	-
1 1/4"	32	0.85	1.97	0.44	0.31	0.55	M6	6.50	2.21	4.02	N/A	N/A	-	-
1 1/2"	40	1.02	2.76	0.63	0.37	0.64	M8	7.87	2.58	4.69	N/A	N/A	-	-
2"	50	1.02	2.76	0.63	0.37	0.64	M8	7.87	2.93	5.04	N/A	N/A	-	-
2 1/2"	65	1.69	4.02	0.88	0.67	0.97	M10*	19.49	3.46	6.38	N/A	N/A	-	-
3"	80	1.71	4.02	0.88	0.67	0.99	M10*	19.49	3.98	6.77	N/A	N/A	-	-
4"	100	1.93	4.02	1.13	0.67	1.18	M10*	23.43	4.80	7.76	N/A	N/A	-	-
5"	125	2.11	4.02	1.13	0.67	1.30	M10*	23.43	5.51	8.90	6.34	15.47	-	-
6"	150	2.56	4.92	1.34	0.91	1.54	M12	31.50	6.57	11.06	7.48	20.20	-	-
8"	200	2.56	4.92	1.34	0.91	1.54	M12	43.31	7.99	12.48	7.48	21.61	-	-
10"	250	3.29	5.51	1.97	1.18	2.05	M16	43.31	10.35	14.88	8.70	24.61	1.57	1.85
12"	300	3.29	5.51	1.97	1.18	2.05	M16	43.31	12.01	16.54	8.70	26.26	1.57	1.85

N/A = Not Available

* For 2 1/2" - 5" JIS10K/20K, W=M12

Copyright © 2010 Tyco Flow Control. All rights reserved.

ANSI 150/300 Dimensions (inches)

Size	DN	ØB		ØD		L		N		T		Øn		ØC	Ød1	f	Wt (lbs)	
		150	300	150	300	150	300	150	300	150	300	150	300				150#	300#
1/2"	15	2.38	2.62	3.50	3.74	4.25	5.51	4	4	0.44	0.56	0.63	0.63	1.38	0.59	0.06	4.01	4.85
3/4"	20	2.76	3.25	3.88	4.61	4.61	5.98	4	4	0.44	0.63	0.63	0.75	1.69	0.79	0.06	4.67	7.17
1"	25	3.13	3.50	4.25	4.88	5.00	6.50	4	4	0.44	0.69	0.63	0.75	2.01	0.98	0.06	6.70	9.88
1 1/2"	40	3.88	4.51	5.00	6.14	6.50	7.48	4	4	0.56	0.81	0.63	0.87	2.87	1.57	0.06	12.79	19.18
2"	50	4.74	5.00	6.00	6.50	7.01	8.50	4	8	0.63	0.88	0.75	0.75	3.62	1.97	0.06	18.43	24.69
2 1/2"	65	5.49	5.87	7.01	7.48	7.48	9.49	4	8	0.69	1.00	0.75	0.87	4.13	2.56	0.06	33.07	41.89
3"	80	6.00	6.61	7.50	8.27	7.99	11.14	4	8	0.75	1.13	0.75	0.87	5.00	2.99	0.06	43.92	61.73
4"	100	7.50	7.87	9.02	10.00	9.02	12.01	8	8	0.94	1.25	0.75	0.87	6.18	3.94	0.06	72.53	96.39
5"	125	8.50	9.25	10.00	11.00	14.00	15.00	8	8	0.94	1.37	0.87	0.87	7.32	4.92	0.06	108.03	156.53
6"	150	9.50	10.63	11.00	12.50	15.50	15.88	8	12	1.00	1.44	0.87	0.87	8.50	5.91	0.06	165.35	220.46
8"	200	11.75	13.00	13.50	15.00	18.00	19.75	8	12	1.13	1.63	0.87	1.00	10.63	7.91	0.06	282.19	379.19
10"	250	14.25	15.25	16.00	17.50	21.00	22.38	12	16	1.19	1.87	1.00	1.13	12.76	9.84	0.06	473.99	641.54
12"	300	17.00	17.75	19.00	20.50	24.00	25.50	12	16	1.25	2.00	1.00	1.25	15.00	11.81	0.06	559.97	932.55

DIN PN 10/16/25/40 Dimensions (inches)

DN	Size	PN	ØB	ØC	ØD	L	*L	N	T	Øn	Ød1	f	Wt (lbs)	
													F1	F4/F5
DN15	1/2"	10/16/25/40	2.56	1.77	3.74	4.53	5.12	4	0.63	0.55	0.59	0.08	5.34	5.42
DN20	3/4"	10/16/25/40	2.95	2.28	4.13	4.72	5.91	4	0.71	0.55	0.79	0.08	7.14	6.79
DN25	1"	10/16/25/40	3.35	2.68	4.53	4.92	6.30	4	0.71	0.55	0.98	0.08	9.74	9.22
DN32	1 1/4"	10/16/25/40	3.94	3.07	5.51	5.12	7.09	4	0.71	0.71	1.26	0.08	13.45	12.39
DN40	1 1/2"	10/16/25/40	4.33	3.46	5.91	5.51	7.87	4	0.71	0.71	1.57	0.08	17.50	16.31
DN50	2"	10/16/25/40	4.92	4.02	6.50	5.91	9.06	4	0.79	0.71	1.97	0.08	23.15	21.52
DN65	**2 1/2"	10/16	5.71	4.80	7.28	6.69	11.42	4	0.71	0.71	2.56	0.08	37.48	36.60
		25/40	5.71	4.80	7.28	6.69	11.42	8	0.87	0.71	2.56	0.08	40.34	35.76
DN80	3"	10/16	6.30	5.43	7.87	7.09	12.20	8	0.79	0.71	3.15	0.08	47.40	47.18
		25/40	6.30	5.43	7.87	7.09	12.20	8	0.94	0.71	3.15	0.08	54.90	47.05
DN100	4"	10/16	7.09	6.22	8.66	7.48	13.78	8	0.79	0.71	3.94	0.08	74.96	61.11
		25/40	7.48	6.38	9.25	7.48	13.78	8	0.94	0.87	3.94	0.08	82.01	69.27
DN125	5"	10/16	8.27	7.40	9.84	12.80	15.75	8	0.87	0.71	4.92	0.08	110.23	105.80
		25/40	8.66	7.40	10.63	12.80	15.75	8	1.02	1.02	4.92	0.08	132.28	125.60
DN150	6"	10/16	9.45	8.35	11.22	13.78	18.90	8	0.87	0.87	5.91	0.08	171.96	160.94
		25/40	9.84	8.58	11.81	13.78	18.90	8	1.10	1.02	5.91	0.08	202.83	180.78
DN200	8"	10	11.61	10.55	13.39	15.75	23.62	8	0.94	0.87	7.87	0.08	273.37	216.05
		16	11.61	10.55	13.39	15.75	23.62	12	0.94	0.87	7.87	0.08	273.37	216.05
		25	12.20	10.94	14.17	15.75	23.62	12	1.18	1.02	7.87	0.08	361.56	326.28
		40	12.60	11.22	14.76	15.75	23.62	12	1.34	1.18	7.87	0.08	361.56	326.28
DN250	10"	10	13.78	12.60	15.55	17.72	28.74	12	1.02	0.87	9.84	0.08	595.25	447.54
		16	13.98	12.60	15.94	17.72	28.74	12	1.02	1.02	9.84	0.08	595.69	447.54
DN300	12"	10	15.75	14.57	17.52	19.69	33.46	12	1.02	0.87	11.81	0.08	N/A	513.68
		16	16.14	14.88	18.11	19.69	33.46	12	1.10	1.02	11.81	0.08	N/A	513.68

L Dimensions 1/2" to 4" F4, 5" to 12" F5 (L Dimensions to ISO 5752 Series 27 EN558 F4/F5)
*L Dimensions 1/2" to 12", F1 (L Dimensions to ISO 5752 Series 1 EN558 F1)
** For DN65, PN25/40 F1, please contact your sales representative.

JIS 10K/20K Dimensions (inches)

Size		ØB		ØC		ØD		L		N		T		Øn		J	K	Ød1	f	H	Wt (lbs)	
		10K	20K	10K	20K	10K	20K	10K	20K	10K	20K	10K	20K	10K	20K						10K	20K
15A	1/2"	2.76	2.76	2.01	2.01	3.74	3.74	4.25	5.51	4	4	0.47	0.55	0.59	0.59	N/A	N/A	0.59	0.04	1.52	4.63	5.20
20A	3/4"	2.95	2.95	2.20	2.20	3.94	3.94	4.61	5.98	4	4	0.55	0.63	0.59	0.59	N/A	N/A	0.79	0.04	1.65	5.51	6.17
25A	1"	3.54	3.54	2.64	2.64	4.92	4.92	5.00	6.50	4	4	0.55	0.63	0.75	0.75	N/A	N/A	0.98	0.04	2.03	8.51	10.03
32A	1 1/4"	3.94	N/A	2.99	N/A	5.31	N/A	5.51	N/A	4	N/A	0.63	N/A	0.75	N/A	N/A	N/A	1.26	0.08	2.21	12.13	N/A
40A	1 1/2"	4.13	4.13	3.19	3.19	5.51	5.51	6.50	7.48	4	4	0.63	0.71	0.75	0.75	N/A	N/A	1.57	0.08	2.58	14.29	15.79
50A	2"	4.72	4.72	3.78	3.78	6.10	6.10	7.01	8.50	4	8	0.63	0.71	0.75	0.75	N/A	N/A	1.97	0.08	2.93	18.52	19.67
65A	2 1/2"	5.51	5.51	4.57	4.57	6.89	6.89	7.48	9.49	4	8	0.71	0.79	0.75	0.87	N/A	N/A	2.56	0.08	3.54	30.42	34.17
80A	3"	5.91	6.30	4.96	5.35	7.28	7.87	7.99	11.14	8	8	0.71	0.87	0.75	0.91	N/A	N/A	2.99	0.08	3.98	41.01	51.24
100A	4"	6.89	7.28	5.94	6.30	8.27	8.86	9.02	12.01	8	8	0.71	0.94	0.75	0.91	N/A	N/A	3.94	0.08	4.80	60.32	75.18
125A	5"	8.27	8.86	7.28	7.68	9.84	10.63	14.02	15.00	8	8	0.79	1.02	0.91	0.98	6.34	15.47	4.92	0.08	5.51	101.41	152.12
150A	6"	9.45	10.24	8.35	9.06	11.02	12.01	15.51	15.87	8	12	0.87	1.10	0.91	0.98	7.48	20.20	5.91	0.08	6.57	160.94	202.83
200A	8"	11.42	12.01	10.31	10.83	12.99	13.78	17.99	19.76	12	12	0.87	1.18	0.91	0.98	7.48	21.61	7.91	0.08	7.99	264.55	306.44
250A	10"	13.98	14.96	12.76	13.58	15.75	16.93	20.98	22.36	12	12	0.94	1.34	0.98	1.06	8.70	24.61	9.84	0.08	10.35	443.13	641.54
300A	12"	15.75	16.93	14.49	15.55	17.52	18.90	24.02	25.51	16	16	0.94	1.42	0.98	1.06	8.70	26.26	11.81	0.12	12.01	559.97	932.55

Copyright © 2010 Tyco Flow Control. All rights reserved.

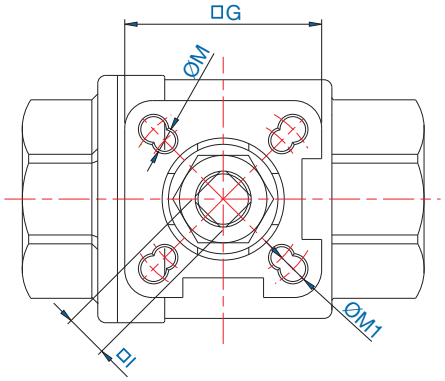

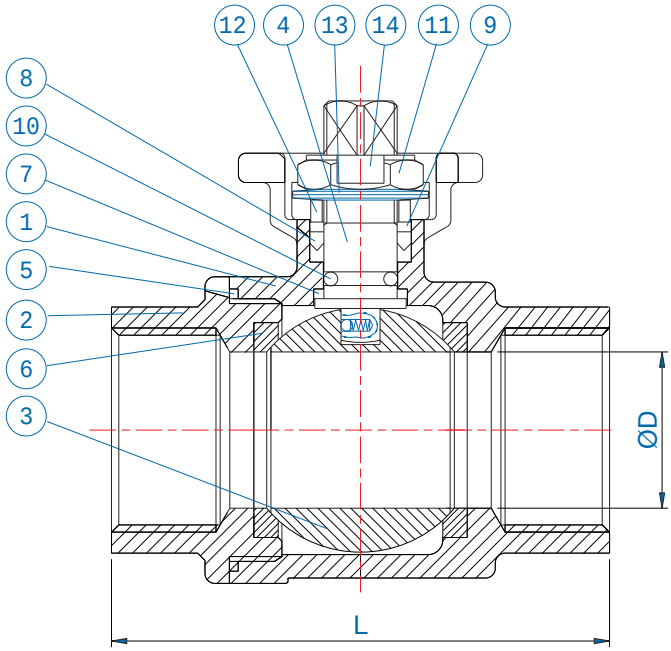

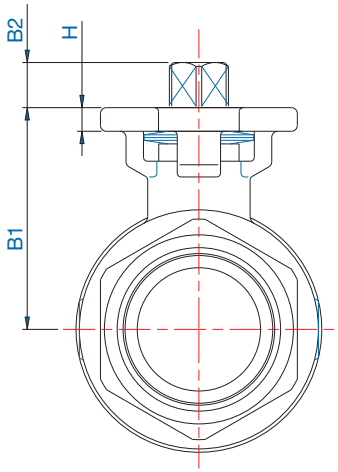

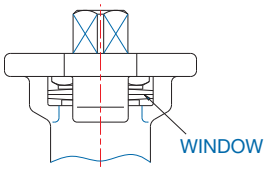

Materials of Construction

No.	Parts Name	Material	Quantity
1	Body	CF8M / 1.4408	1
2	End Cap	CF8M / 1.4408	1
3	Ball	316SS	1
4	Stem	316SS	1
5	Body Seal	PTFE	1
6	Seat	TFM1600	2
7	Stem Seal	R.PTFE	1
8	V-ring Packing	PTFE	1 Set
9	Bushing	50% SS Powder filled PTFE	1
10	O-ring	Viton	1
11	Stem Nut	304SS	1
12	Gland	304SS	1
13	Belleville Washer	301SS	2
14	Lock Saddle	304SS	1

Features

- Full port
- Investment casting body and cap
- Blow-out proof stem
- Size range DN15 (1/2") to DN80 (3")
- ISO 5211 direct mount pad

Note:
For Pressure/Temperature charts, please refer to Page 35

Dimensions (inches)

Size	DN	B1	B2	ØD	□G	H	L	□I	ØM	ØM1	ISO5211
1/2"	15	1.40	0.35	0.59	1.65	0.20	2.56	0.35	0.22	0.22	F03/F04
3/4"	20	1.53	0.35	0.79	1.65	0.20	2.95	0.35	0.22	0.22	F03/F04
1"	25	2.05	0.42	0.98	1.97	0.24	3.46	0.43	0.22	0.26	F04/F05
1 1/4"	32	2.24	0.42	1.26	1.97	0.24	3.94	0.43	0.22	0.26	F04/F05
1 1/2"	40	2.59	0.61	1.50	2.76	0.28	4.33	0.55	0.26	0.33	F05/F07
2"	50	2.91	0.61	1.97	2.76	0.28	4.84	0.55	0.26	0.33	F05/F07
2 1/2"	65	3.66	0.65	2.56	3.94	0.41	6.30	0.67	0.35	0.43	F07/F10
3"	80	4.02	0.65	3.15	3.94	0.41	6.89	0.67	0.35	0.43	F07/F10

Copyright © 2010 Tyco Flow Control. All rights reserved.

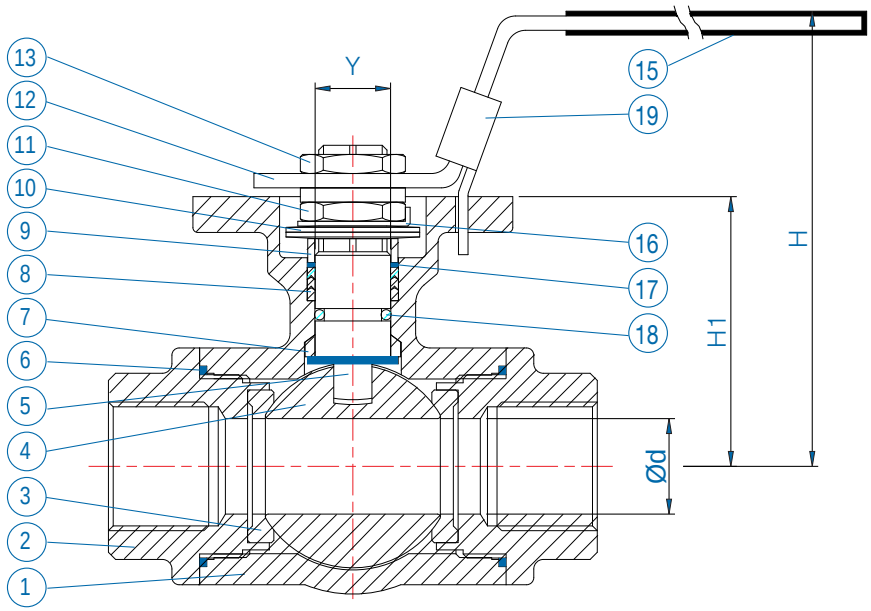

Materials of Construction

No.	Parts Name	Material	Quantity
1	Body	CF8M / 1.4408	1
2	Cap	CF8M / 1.4408	3
3	Seat	RPTFE	4
4	Ball	CF8M / 1.4408	1
5	Stem	316SS	1
6	Joint Gasket	RPTFE	3
7 & 17	Thrust Washer	RPTFE	2
8	Stem Packing	RPTFE	1 Set
9	Gland	304SS	1
10	Belleveille Washer	304SS	2
11 & 13	Handle Nut	304SS	2
12	Handle	304SS	1
14	Stop Pin	304SS	1
15	Handle Sleeve	Plastic	1
16	Washer	304SS	1
18	O-Ring	Viton	1
19	Locking Device	304SS	1

Features

- General purpose 1,000psi (PN63), ball valve
- Investment casting body and caps
- All stainless steel construction only
- Variety of thread standards available
- L or T port Options
- Blow-out proof stem
- 4 seats for rigid ball supporting
- Size range DN8 (1/4") to DN50 (2") - Reduced bore

Note:
For Pressure/Temperature charts, please refer to Page 35

Copyright © 2010 Tyco Flow Control. All rights reserved.

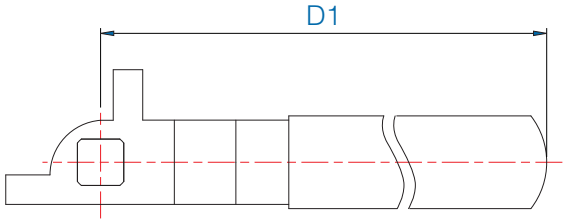

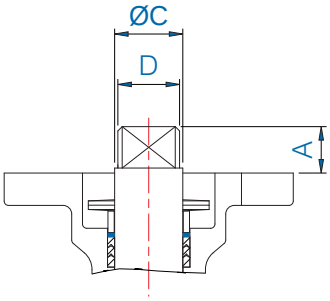

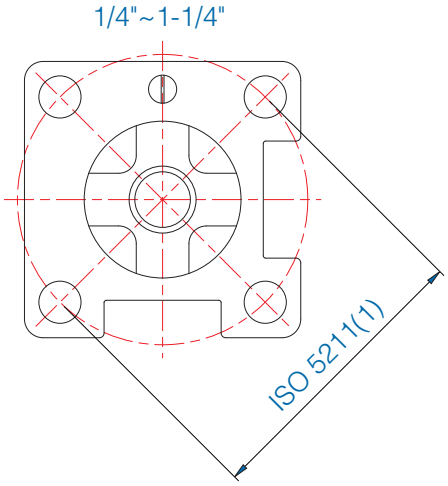

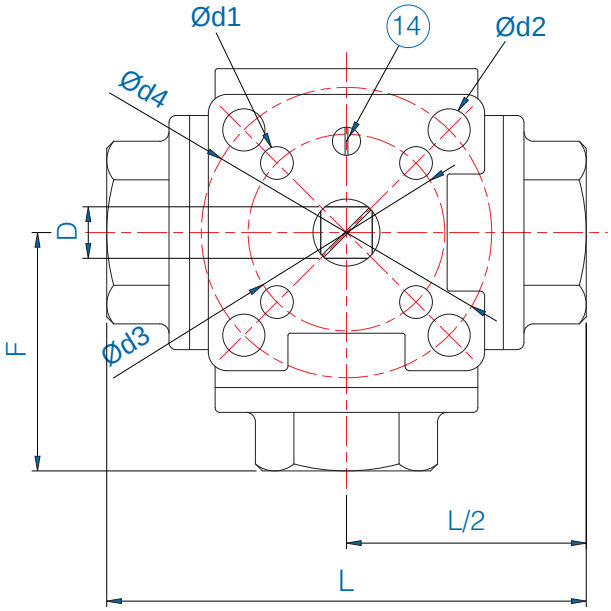

Dimensions (inches)

Size	DN	d	L	H	D1	A	ØC	D	F	d1	d2	d3	d4	H1
1/4"	8	0.43	2.98	3.05	4.41	0.35	0.47	0.35	1.47	N/A	0.24	N/A	1.65	1.50
3/8"	10	0.43	2.98	3.05	4.41	0.35	0.47	0.35	1.47	N/A	0.24	N/A	1.65	1.50
1/2"	15	0.50	2.98	3.05	4.41	0.35	0.47	0.35	1.47	N/A	0.24	N/A	1.65	1.50
3/4"	20	0.63	3.41	3.23	4.41	0.35	0.47	0.35	1.76	N/A	0.24	N/A	1.65	1.78
1"	25	0.79	4.03	3.69	5.37	0.43	0.62	0.43	2.02	N/A	0.28	N/A	1.97	2.22
1 1/4"	32	0.98	4.65	3.98	7.40	0.43	0.62	0.43	2.27	N/A	0.28	N/A	1.97	2.44
1 1/2"	40	1.26	4.95	4.73	7.78	0.56	0.82	0.55	2.47	0.28	0.36	1.97	2.76	3.08
2"	50	1.50	5.87	5.11	7.78	0.55	0.82	0.55	2.94	0.28	0.36	1.97	2.76	3.44

N/A = Not Available

Copyright © 2010 Tyco Flow Control. All rights reserved.

R110
One-piece Body Ball Valve

DN8 (1/4") to DN50 (2") - Reduced Bore

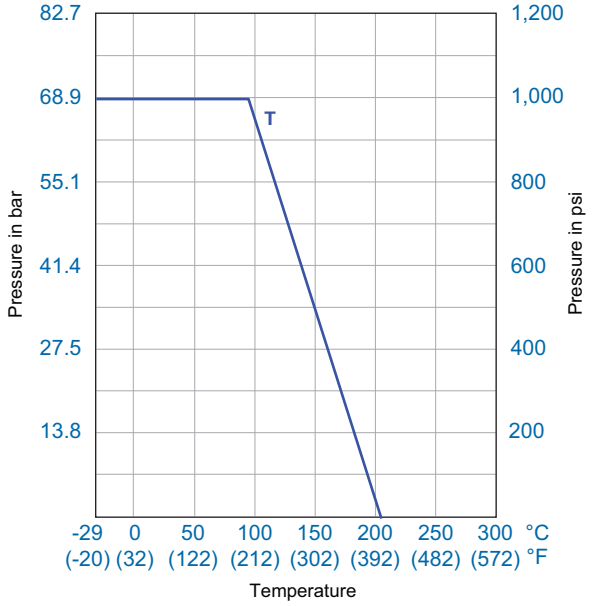

F120
Two-piece Body Ball Valve

DN8 (1/4") to DN50 (2") - Full Bore

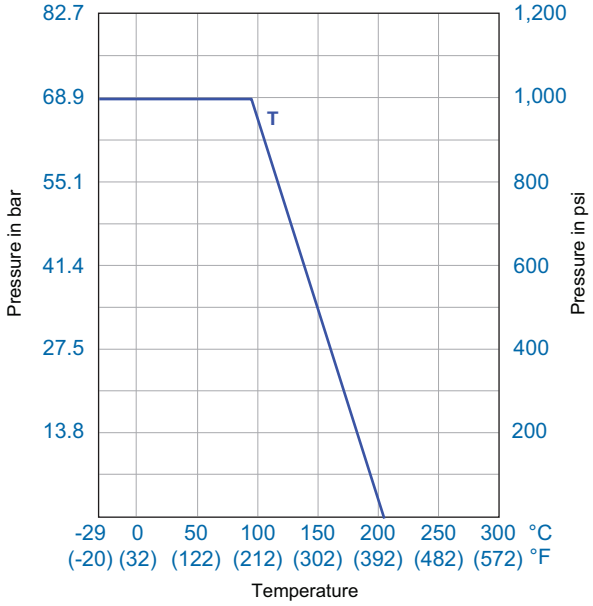

F130M
Three-way Split-body Ball Valve

PN40, PN25, PN16, PN10:
DN50 (2") to DN150 (6") - Full Bore
DN200 (8") - Reduced Bore

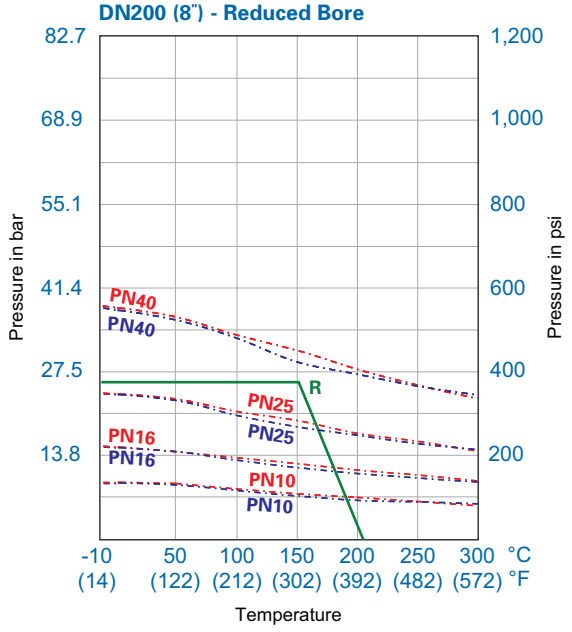

F130M, R130M
Three-way Split-body Ball Valve

ANSI Class 150/300:
DN50 (2") to DN150 (6") - Full Bore
DN200 (8") - Reduced Bore

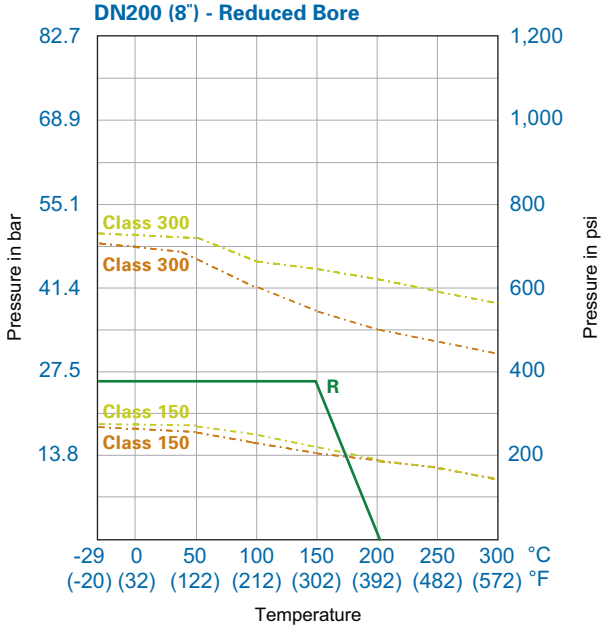

= Body material 1.0619 Body Rating
= Body material 1.4408 Body Rating
= WCB Body Rating
= CF8M Body Rating
T = PTFE
R = RPTFE

Copyright © 2010 Tyco Flow Control. All rights reserved.

F133M/F133MT, R133M
Three and Four-way Split-body Ball Valve

PN63, PN40, PN25, PN16, PN10:
DN10 (3/8") to DN40 (1 1/2") - Full Bore
DN15 (1/2") to DN50 (2") - Reduced Bore

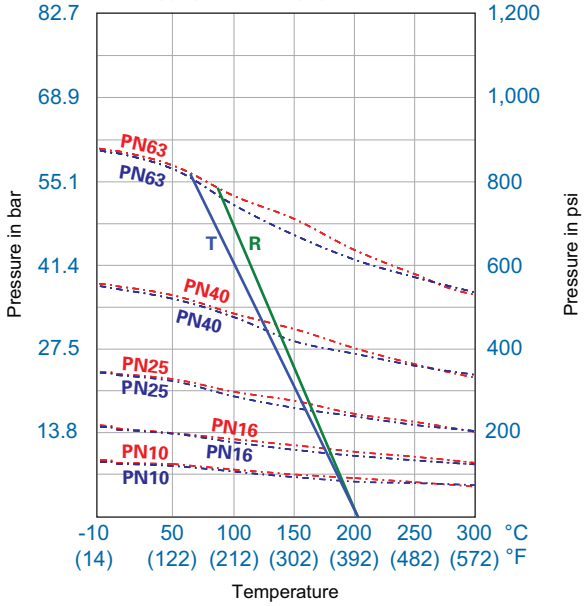

F133M/F133MT, R133M
Three and Four-way Split-body Ball Valve

ANSI Class 150/300:
DN10 (3/8") to DN40 (1 1/2") - Full Bore
DN15 (1/2") to DN50 (2") - Reduced Bore

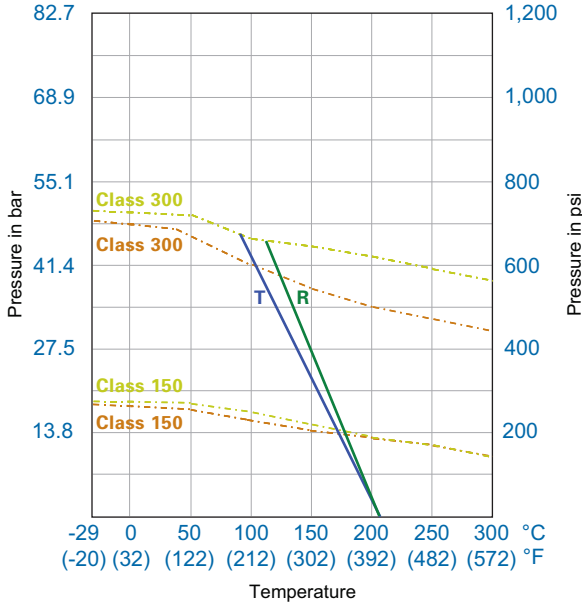

R138
Three-way Multi-port Ball Valve

DN8 (1/4") to DN50 (2") - Reduced Bore

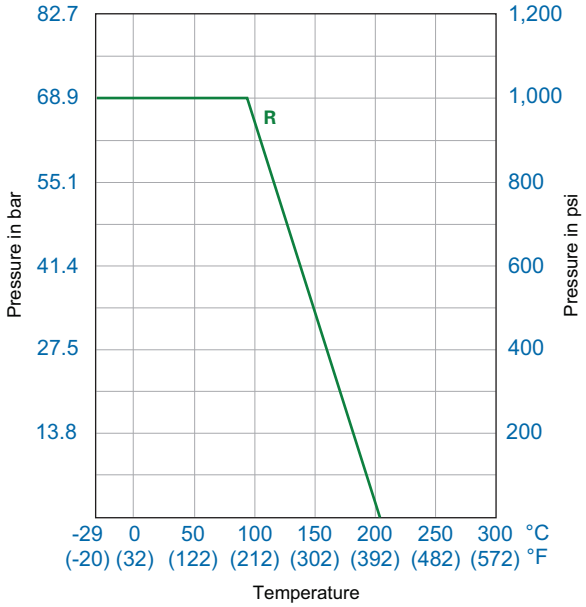

F151
Three-piece Economical Ball Valve

DN8 (1/4") to DN100 (4") - Full Bore

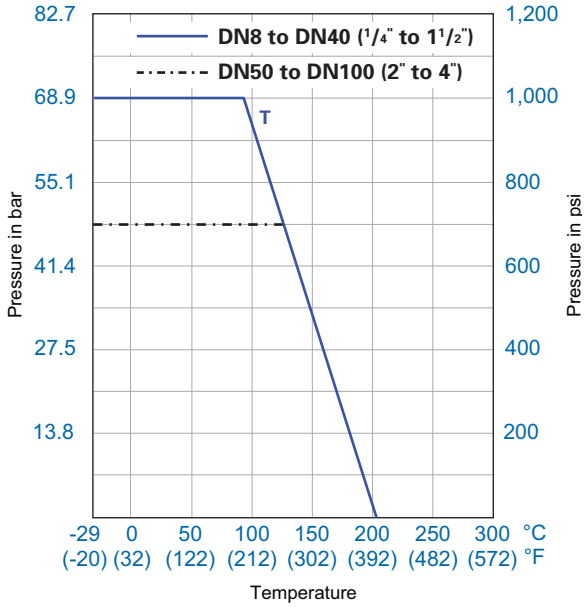

= Body material 1.0619 Body Rating
= Body material 1.4408 Body Rating
= WCB Body Rating
= CF8M Body Rating
T = PTFE
R = RPTFE

Copyright © 2010 Tyco Flow Control. All rights reserved.

F171
Three-piece Ball Valve to ISO 5211

ANSI Class 300/400:
DN8 (1/4") to DN40 (1 1/2") - Full Bore
DN50 (2") to DN100 (4") - Full Bore

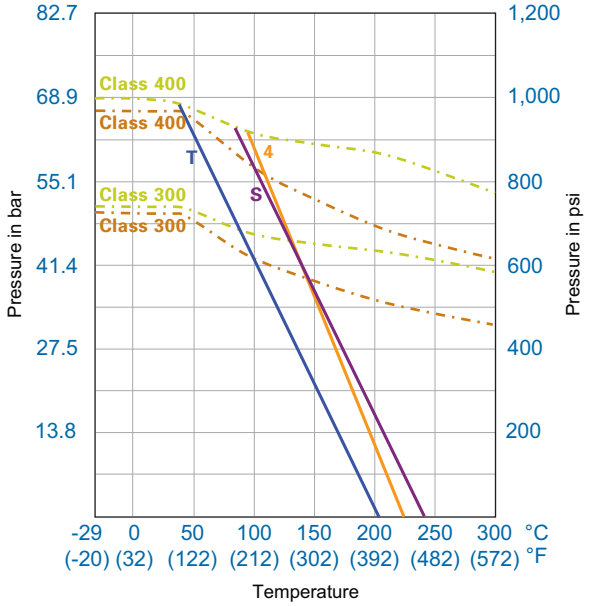

F171T
Three-piece High Purity Clean Ball Valve

ANSI Class 300/400:
DN15 (1/2") to DN40 (1 1/2") - Full Bore
DN50 (2") to DN100 (4") - Full Bore

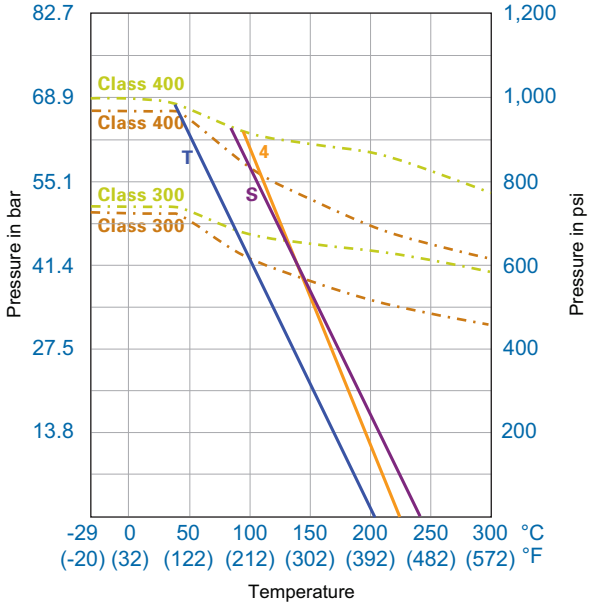

F171T
Three-piece High Purity Clean Ball Valve

ANSI Class 150:
DN125 (5") to DN300 (12") - Full Bore

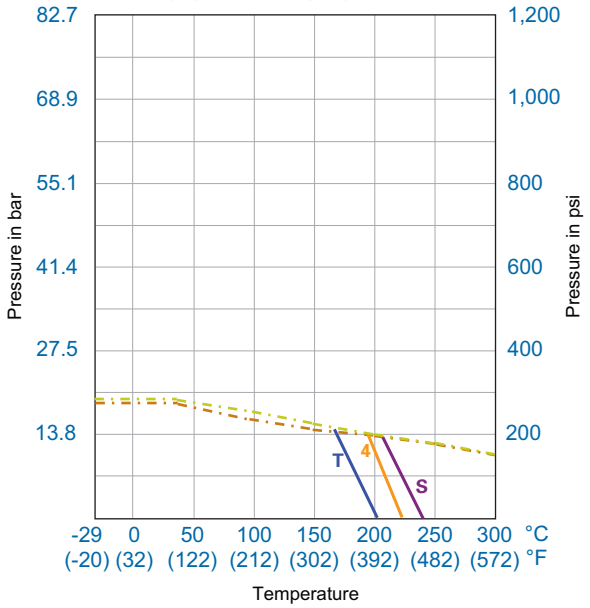

= WCB Body Rating
= CF8M Body Rating
T = PTFE
R = RPTFE
4 = 25% CARBON FILLED PTFE
S = 50% SS FILLED PTFE
U = UHMWP
K = PEEK (450G)
M = MG1241
H = TFM 1600

F180/F180F, R180/R180F
Three-piece Heavy Duty Ball Valve/Fire Safe

ANSI Class 300/600:
DN8 (1/4") to DN50 (2") - Full Bore
DN65 (2 1/2") to DN80 (3") - Full Bore

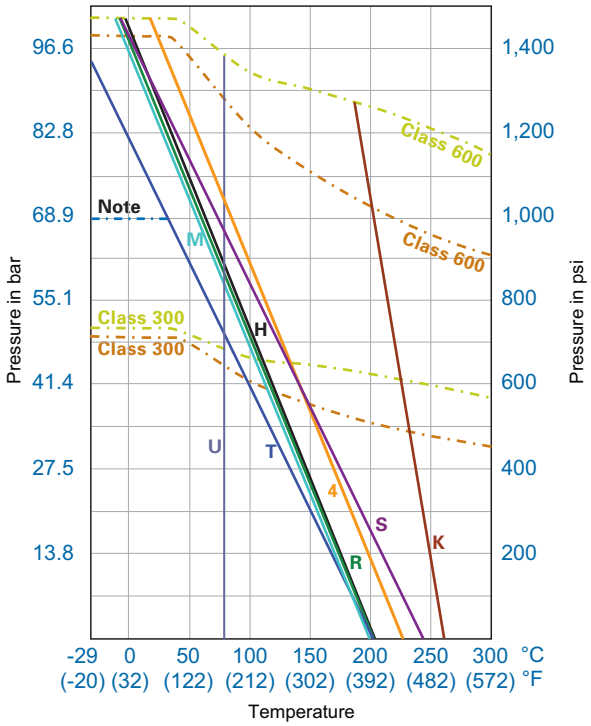

Note: PTFE seat is good to pressure up to 1,000 psi (68.9 bar). Recommend max. operating pressure rating not to exceed 1,000 psi for 1" and larger sizes.

Copyright © 2010 Tyco Flow Control. All rights reserved.

F190/F190F - ANSI
Split-body Flanged Ball Valve
DN15 (1/2") to DN20 (3/4") - Full Bore

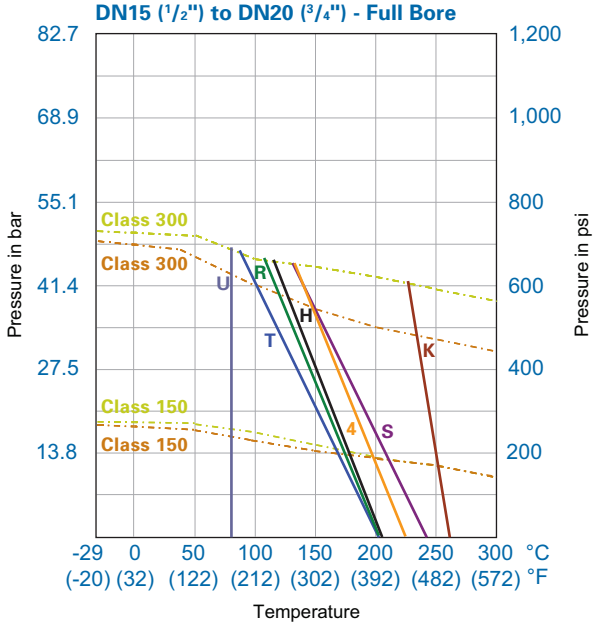

F190/F190F - ANSI
Split-body Flanged Ball Valve
DN25 (1") to DN65 (2 1/2") - Full Bore

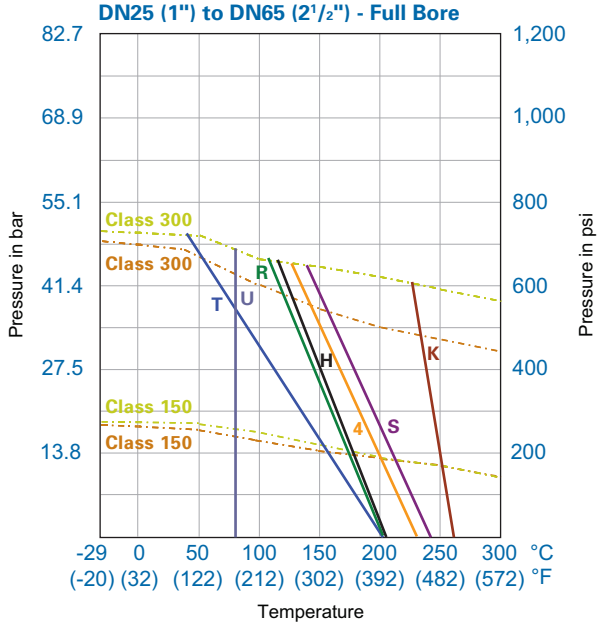

F190/F190F - ANSI
Split-body Flanged Ball Valve
DN80 (3") to DN100 (4") - Full Bore

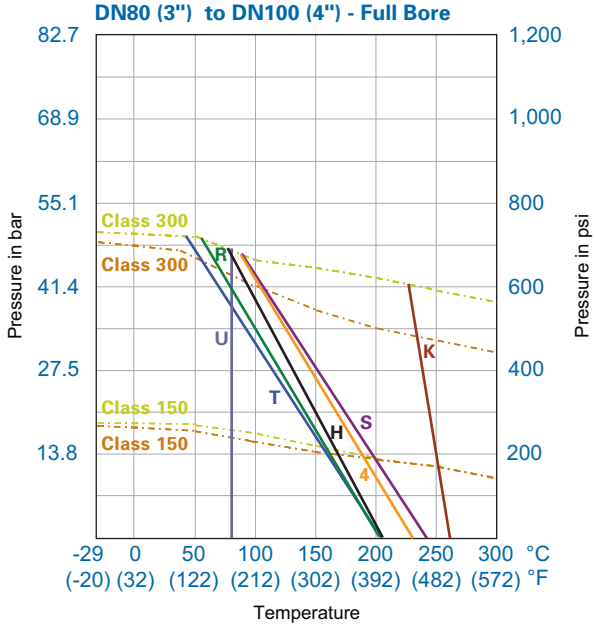

F190/F190F - ANSI
Split-body Flanged Ball Valve
DN125 (5") to DN300 (12") - Full Bore

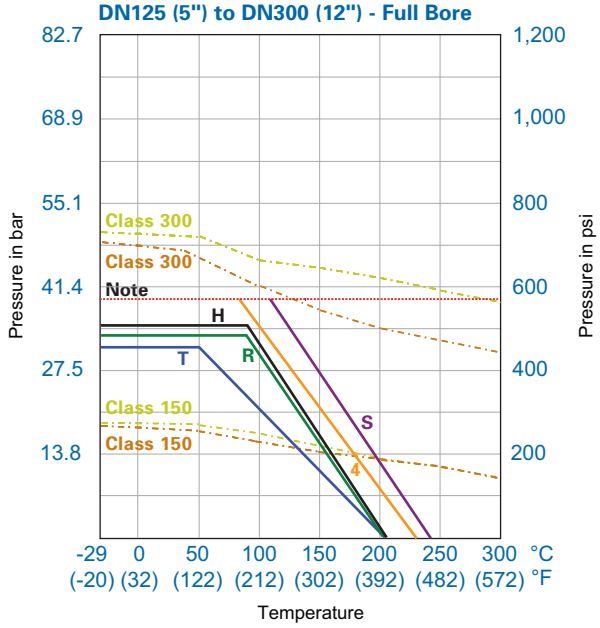

- - - - = Body material 1.0619 Body Rating
- · - · = Body material 1.4408 Body Rating
— · — = WCB Body Rating
- · - · = CF8M Body Rating

T = PTFE
R = RPTFE
4 = 25% CARBON FILLED PTFE
S = 50% S.S FILLED PTFE
U = UHMWP
K = PEEK (450G)
H = TFM 1600

Note: 50% S.S Filled PTFE and 25% Carbon Filled PTFE shall not exceed this rating line for Ansi Class 300

Copyright © 2010 Tyco Flow Control. All rights reserved.

F190/F190F - DIN
Split-body Flanged Ball Valve
DN15 (1/2") to DN20 (3/4") - Full Bore

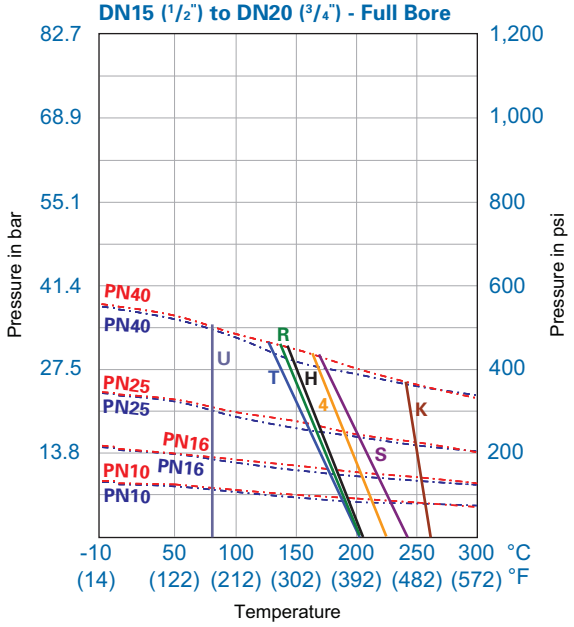

F190/F190F - DIN
Split-body Flanged Ball Valve
DN25 (1") to DN65 (2 1/2") - Full Bore

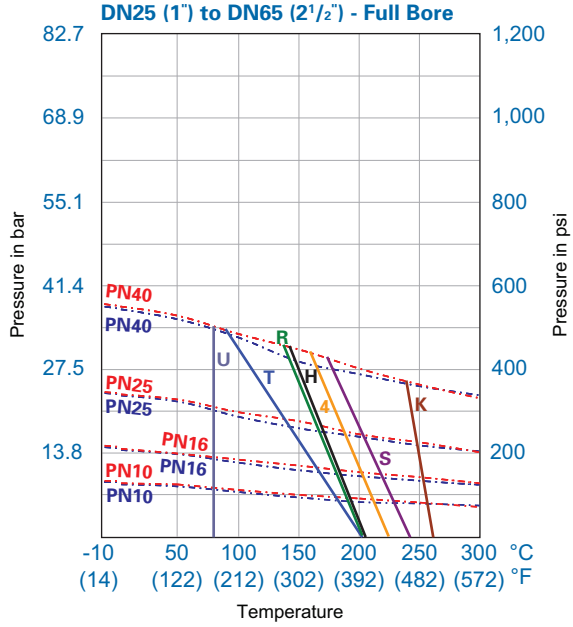

F190/F190F - DIN
Split-body Flanged Ball Valve
DN80 (3") to DN100 (4") - Full Bore

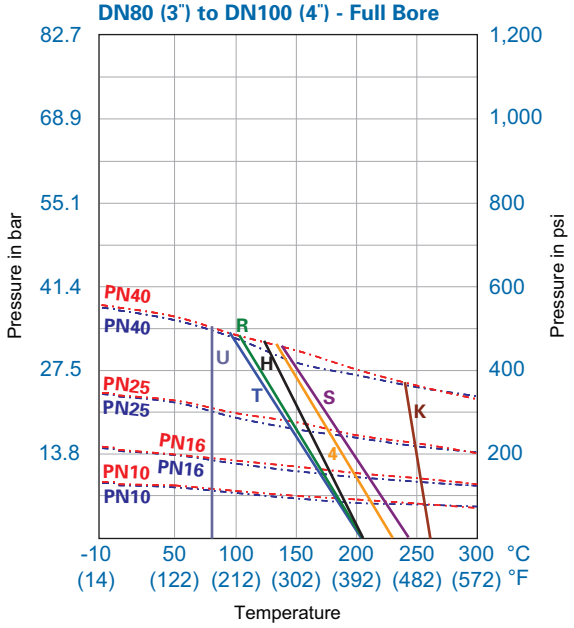

F190/F190F - DIN
Split-body Flanged Ball Valve
DN125 (5") to DN300 (12") - Full Bore

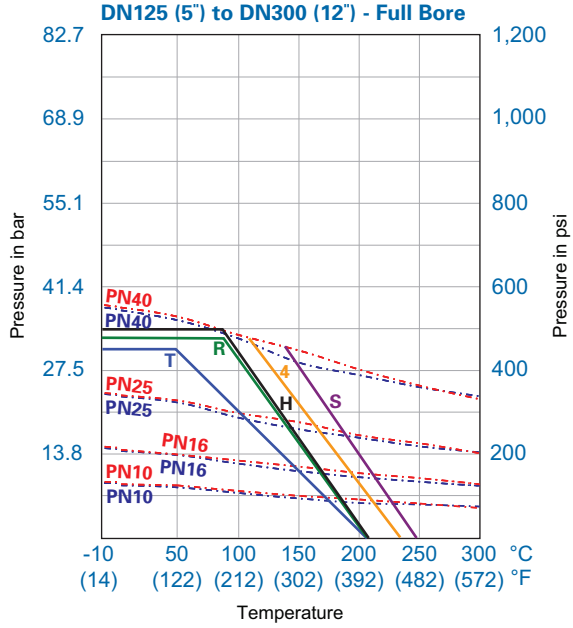

= Body material 1.0619 Body Rating
= Body material 1.4408 Body Rating
= WCB Body Rating
= CF8M Body Rating
T = PTFE
R = RPTFE
4 = 25% CARBON FILLED PTFE
S = 50% S.S FILLED PTFE
U = UHMWP
K = PEEK (450G)
H = TFM 1600

Copyright © 2010 Tyco Flow Control. All rights reserved.

F129
Two-piece Direct Mounting Ball Valve

DN15 (1/2") to DN80 (3") - Full Bore

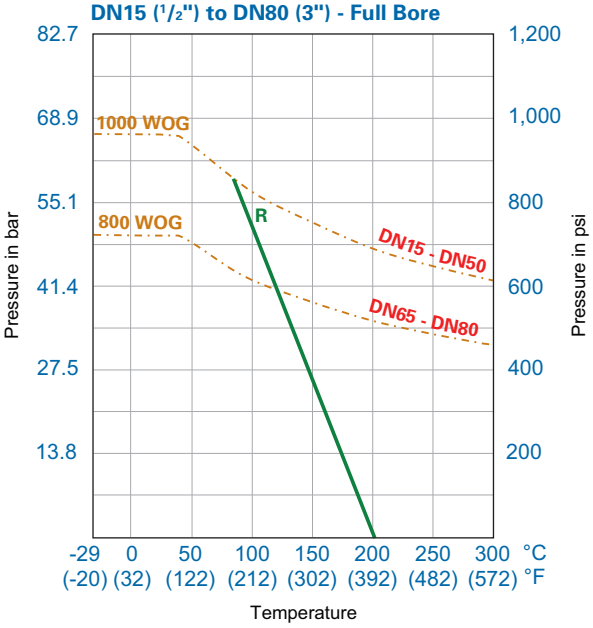

R139
Three-way Multi-port Direct Mounting Ball Valve

DN8 (1/4") to DN50 (2") - Reduced Bore

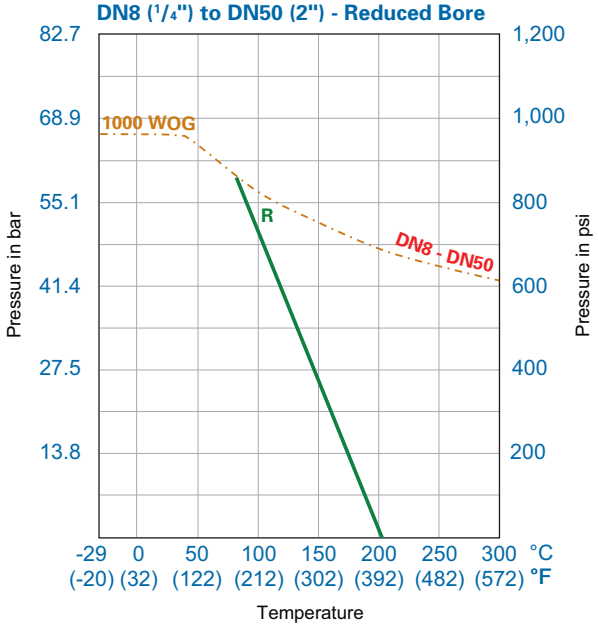

- · - · - = CF8M Body Rating
R = RPTFE

Copyright © 2010 Tyco Flow Control. All rights reserved.

F171 Differential - Pressure Torque

Seat : PTFE — Pressure Unit : psi — Torque Unit: N-M (in-lbs)

Size	DN	0	100	300	700	1000	1500
1/2"	15	6.2 (55)	6.5 (58)	6.7 (59)	7.2 (64)	8.5 (75)	12.5 (111)
3/4"	20	8.9 (79)	9.1 (81)	9.6 (85)	10.6 (94)	11.7 (104)	13.6 (120)
1"	25	12.0 (106)	12.3 (109)	12.6 (112)	12.8 (113)	13.1 (116)	14.5 (128)
1 1/4"	32	13.6 (120)	13.8 (122)	14.4 (127)	16.9 (150)	20.6 (182)	- -
1 1/2"	40	18.2 (161)	18.6 (165)	19.5 (173)	23.4 (207)	33.0 (292)	- -
2"	50	21.2 (188)	21.6 (191)	23.3 (206)	38.4 (340)	67.6 (598)	- -
2 1/2"	65	42.4 (375)	46.7 (413)	60.6 (536)	127.6 (1129)	- -	- -
3"	80	60.9 (539)	63.7 (564)	82.7 (732)	180.5 (1597)	- -	- -
4"	100	79.6 (704)	82.5 (730)	104.8 (927)	212.7 (1882)	- -	- -

F180/F180F Differential - Pressure Torque

Seat : PTFE — Pressure Unit : psi — Torque Unit : N-M (in-lbs)

Size	DN	0	100	300	700	1000	1500
1/2"	15	5.1 (45)	5.3 (47)	5.3 (47)	5.3 (47)	5.4 (48)	5.4 (48)
3/4"	20	7.7 (68)	7.7 (68)	7.8 (69)	7.8 (69)	8.0 (71)	8.0 (71)
1"	25	9.6 (85)	9.8 (87)	10.1 (89)	10.1 (89)	10.2 (90)	10.2 (90)
1 1/4"	32	12.4 (110)	12.6 (112)	13.1 (116)	16.4 (145)	20.9 (185)	- -
1 1/2"	40	19.4 (172)	19.9 (176)	20.9 (185)	25.5 (226)	36.0 (319)	- -
2"	50	28.0 (248)	28.1 (249)	29.7 (263)	48.4 (428)	79.8 (706)	- -
2 1/2"	65	48.3 (427)	52.6 (466)	64.4 (570)	128.5 (1137)	- -	- -
3"	80	59.2 (524)	62.6 (554)	84.5 (748)	181.6 (1607)	- -	- -

F190/F190F Differential - Pressure Torque

Seat : PTFE — Pressure Unit : psi — Torque Unit : N-M (in-lbs)

Size	DN	0	100	200	300	400	500
1/2"	15	8.4 (74)	8.6 (76)	8.7 (77)	8.9 (79)	9.1 (81)	9.5 (84)
3/4"	20	11.8 (104)	12.4 (110)	12.7 (112)	12.9 (114)	13.1 (116)	13.8 (122)
1"	25	13.4 (119)	13.5 (119)	14.0 (124)	14.4 (127)	15.2 (135)	16.0 (142)
1 1/2"	40	23.5 (208)	24.2 (214)	24.6 (218)	25.0 (221)	25.5 (226)	26.1 (231)
2"	50	30.8 (273)	31.0 (274)	31.5 (279)	31.8 (281)	32.2 (285)	32.7 (289)
2 1/2"	65	42.7 (378)	46.2 (409)	50.1 (443)	51.8 (458)	58.4 (517)	65.4 (579)
3"	80	58.0 (513)	81.8 (724)	100.2 (887)	123.8 (1096)	144.0 (1274)	156.6 (1386)
4"	100	81.5 (721)	88.1 (780)	111.2 (984)	147.6 (1306)	176.3 (1560)	209.2 (1851)
6"	150	197.2 (1745)	203.5 (1801)	214.5 (1898)	255.7 (2263)	364.0 (3221)	474.5 (4199)
8"	200	360.0 (3186)	379.0 (3354)	456.0 (4036)	606.0 (5363)	- -	- -
10"	250	528.0 (4673)	607.2 (5374)	728.6 (6448)	- -	- -	- -
12"	300	792.0 (7009)	910.8 (8061)	1093.0 (9673)	- -	- -	- -

Multi-port Ball Valve Seats (PTFE) for F130M, F133M - Max Break-away Torque

Size	DN	in-lbs	Nm
3/8"	10	80	9
1/2"	15	90	10
3/4"	20	100	11
1"	25	150	17
1 1/4"	32	200	23
1 1/2"	40	350	40
2"	50	450	51
2 1/2"	65	800	90
3"	80	1,500	169
4"	125	3,000	339
6"	150	5,000	564

Note:
1. Increase by 15% for dry gas. Increase by 35% for fluids with solid or abrasive contents.
2. Increase by 15% for RPTFE seat. Increase by 25% for MG1241, carbon & SS filled seat.
3. For actuator sizing, we recommend to add at least 20% of the break-away torque of valve as safety factor.
4. Valve torques refer to ball valves with full prot. For reduce port valve torque take one size smaller.
5. Torque value can depending upon temperature, pressure, line medium and seat material. Above figures are for clean fluids only.

Copyright © 2010 Tyco Flow Control. All rights reserved.

T-Port 90º Turn

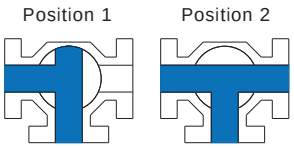

Flow Plan D

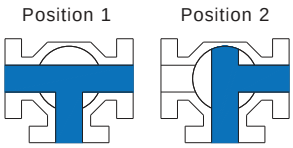

Flow Plan E

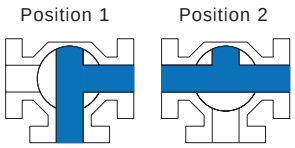

Flow Plan F

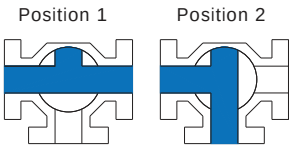

Flow Plan G

T-Port 180º Turn

Flow Plan H

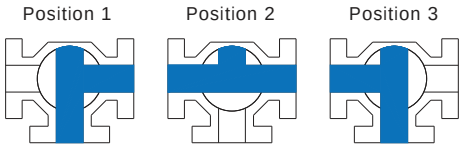

Flow Plan I

Flow Plan J

Flow Plan K

L-Port 90º Turn

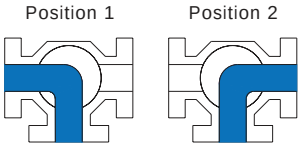

Flow Plan A

L-Port 180º Turn

Flow Plan B

LL-Port* 90º Turn

(Not available for F133MT, R138 & R139)

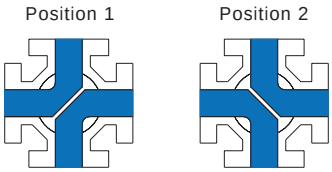

Flow Plan M

L-Port 180º Turn (Not available for R138 & R139)

4-Way Valves

Flow Plan N

* Please consult factory for minimum order quantity.

Copyright © 2010 Tyco Flow Control. All rights reserved.

F 180 S H T 1 SE A T 030 ES6 ---

Bore
- **F** = Full Bore (1/4" to 12")
- **R** = Standard Bore (1/2" to 4")

Series
- **R110** – 1-piece unibody threaded end ball valves
- **F120** – 2-piece threaded end ball valves
- **F129** – 2-piece threaded end ball valve with ISO mounting pad
- **R/F130M** – 3-way high performance flanged ball valves
- **R133M** – 3-way high performance flanged ball valve (reduced bore)
- **F133M** – 3-way high performance ball valves
- **F133MT** – 3-way high performance ball valves (polished tube port)
- **R138** – 3-way threaded end ball valves
- **R139** – 3-way threaded end ball valves with ISO mounting pad
- **F151** – 3-piece economical ball valves
- **F171** – 3-piece high performance ball valves
- **F171T** – 3-piece high performance ball valves (polished tube port)
- **R180** – 3-piece heavy duty ball valves (reduced bore)
- **F180** – 3-piece heavy duty ball valves (full bore)
- **R180F** – 3-piece firesafe heavy duty ball valves (reduced bore)
- **F180F** – 3-piece firesafe heavy duty ball valves (full bore)
- **F190** – Split-body flanged ball valves
- **F190F** – Split-body firesafe flanged ball valves

***3-way**
- **L** = "L" Port
- **T** = "T" Port
- **LL** = "LL" Port

Body Material ("S" Std Trim)
- **S** = 316 CF8M 1.4408 SCS 14 Cast Stainless Steel
- **SL** = 316L CF3M 1.4409 Cast Stainless Steel
- **C** = WCB GS-C25 1.0619 Carbon Steel
- **O** = Other (*) please specify

Seats
- **T** = Virgin PTFE
- **R** = Reinforced PTFE
- **4** = 25% Carbon Filled PTFE
- **S** = 50% SS Filled PTFE
- **U** = UHMWP
- **K** = PEEK (450 G)
- **M** = MG1241
- **H=F** = TFM-1600 Enhanced PTFE

Body Seals
- **T** = Virgin PTFE
- **4** = 25% Carbon Filled
- **G** = Graphite (1/2" to 4") or 316SS Spiral Wound Graphite (5" to 12")

Pressure Class
- **1** = 1000 CWP/PN 63
- **2** = 1440 CWP/PN 100
- **15** = ANSI 150
- **30** = ANSI 300
- **5** = PN10
- **6** = PN16
- **7** = PN25
- **8** = PN40

End Connections
- **SE** = Screwed Ends National Pipe Thread (Female)
- **SW** = Socket Weld (Pipe) Ends
- **BW** = Butt Weld (Pipe) Ends Sch. 40 (Other Sch. P.O.A)
- **RF** = Raised Faced Flanged
- **FF** = Flat Faced Flanged
- **TX** = Tube Extended Butt Weld
- **TC** = Tri-clamp
- **O** = Other (specify)
- **Ext. BW** = Extended Butt Weld (Pipe) Ends Sch.5 or Sch.10

Flow Plan (Only for 3-Way Ball Valve)
A, B, D, E, F, G, H, I, J, K, M, N

Handle Options (L Std Lever Handle)
- **NH** = Bare Stem
- **H** = SS Lever Handle (Except for 3" and larger valves)
- **L** = SS Locking Handle
- **O** = SS Oval Handle
- **T** = T Handle
- **G** = Gear Operator

Size

1/4"	3/8"	1/2"	3/4"	1"	1 1/4"	1 1/2"	2"	2 1/2"	3"	4"	5"	6"	8"	10"	12"
DN08	DN10	DN15	DN20	DN25	DN32	DN40	DN50	DN65	DN80	DN100	DN125	DN150	DN200	DN250	DN300
002	**003**	**004**	**006**	**010**	**012**	**015**	**020**	**025**	**030**	**040**	**050**	**060**	**080**	**100**	**120**

Extensions
- **ES3** = 2.36" Stem Extension (Valves 2" and Smaller)
- **ES4** = 3.56" Stem Extension (Valves 2 1/2" - 5)
- **ES6** = 5.90" Stem Extension (Valves 6")
- **SCU** = Fugitive Emissions Box/Secondary Containment Unit

Accessories/Special Options
- **---** = Consult factory for Ordering Code Suffix Regarding Accessories and Special Options
- V = Vented Ball

www.tycoflowcontrol.com

Tyco Flow Control (TFC) provides the information herein in good faith but makes no representation as to its comprehensiveness or accuracy. This data sheet is intended only as a guide to TFC products and services. Individuals using this data sheet must exercise their independent judgment in evaluating product selection and determining product appropriateness for their particular purpose and system requirements. TFC MAKES NO REPRESENTATIONS OR WARRANTIES, EITHER EXPRESS OR IMPLIED, INCLUDING WITHOUT LIMITATION ANY WARRANTIES OF MERCHANTABILITY OR FITNESS FOR A PARTICULAR PURPOSE WITH RESPECT TO THE INFORMATION SET FORTH HEREIN OR THE PRODUCT(S) TO WHICH THE INFORMATION REFERS. ACCORDINGLY, TFC WILL NOT BE RESPONSIBLE FOR DAMAGES (OF ANY KIND OR NATURE, INCLUDING INCIDENTAL, INDIRECT, OR CONSEQUENTIAL DAMAGES) RESULTING FROM THE USE OF OR RELIANCE UPON THIS INFORMATION. Patents and Patents Pending in the U.S. and foreign countries. Tyco reserves the right to change product designs and specifications without notice.

Copyright © 2010 Tyco Flow Control. All rights reserved.