Fisher® Control-Disk™ Rotary Valve

The Fisher Control-Disk rotary valve offers excellent throttling performance. An equal percentage flow characteristic provides an improved throttling range comparable to that of a segmented ball valve. This improved capability allows you to control closer to the target set point, regardless of process disturbances, which results in a reduction in process variability.

The valve body meets PN 10 through PN 40, CL150, and CL300 ratings. Face-to-face dimensions meet EN 558, API 609, and MSS-SP68 standards. Line centering clips provide for versatility to mount and align the same wafer style valve body in different piping configurations (ASME and EN ratings).

The Control-Disk rotary valve features an eccentrically-mounted disk with either soft or metal seal, providing capability for enhanced shutoff. The interchangeable sealing technology allows for the same valve body to accept both soft and metal seals.

The actuator sizing and selection process is improved by simply reading a table for information.

W9425-2

WAFER STYLE

W9418-2

SINGLE FLANGE STYLE

Control-Disk Valve Features

- **Equal percentage flow characteristic—** An equal percentage flow characteristic provides an improved throttling range comparable to that of a segmented ball valve. This improved capability allows you to control closer to the target set point, regardless of process disturbances, which results in a reduction in process variability.
- **Global Standards—** The valve meets API, ASME, and EN standards, making it suitable for use in all world areas.
- **PEEK/PTFE bearing as standard—** The PTFE-lined PEEK bearing is a low friction, low wear bearing. It allows the valve to operate under high pressure drops for a high cycle life while maintaining low torque. The “drop-in” bearing design enables fast, easy maintenance.

- **Lower Operating Torques—** The equal percentage disk reduces operating torque at peak angles of disk opening.

- **Spline-ended Shaft—** The splined shaft with clamped lever and single-pivot linkage reduces lost motion between the actuator and the valve shaft.

- **Improved shaft-disk pinning—** The improved expansion pin system ensures there is a positive, durable connection between disk and shaft. This connection reduces backlash and wear in the drive system, optimizing long-term performance. It also makes disassembly for maintenance quick and simple with no need for special tools.

- **New Spring-Loaded Shaft—** The spring in the outboard shaft provides support to the drive train and disk, enabling the shaft to be installed in both horizontal and vertical orientations with no detriment to performance or cycle life. This complements the ability to mount the actuator on the left- or right-hand side, enabling access for any installation.

- **Excellent Emissions Capabilities—** The optional ENVIRO-SEAL™ packing systems, are designed with very smooth shaft surfaces and live-loading to provide improved sealing, guiding, and loading force transmission. The seal of the ENVIRO-SEAL system can control emissions to below 100 ppm (parts per million).

- **Sour Service Capability—** Trim and bolting materials are available for applications involving sour liquids and gases. These constructions comply with NACE MR0175-2002, MR0103, and MR0175 / ISO 15156.

- **Field-Reversible Valve Action—** The actuator/valve assembly action can be converted from push-down-to-open to push-down-to-close, or vice versa, without additional parts.

- **Easy Installation—** Line-centering clips engage the line flange bolts to simplify installation and provide for centering of wafer-style valves in the pipeline. End connections are compatible with EN and ASME standards.

- **Excellent Shutoff—** Both the metal and soft seal rings have pressure-assisting sealing action that ensures tight shutoff regardless of pressure drop.

- **Long Seal Life—** The opening and closing path of the eccentric disk minimizes disk contact with the seal ring, thereby reducing seal wear, undue friction, and seating torque requirements. See figure 2.

- **Reliable Flange Gasketing Surface—** The seal retainer screws and retention clips are outside the gasket surface of the seal retainer. Spiral-wound or flat-sheet gaskets can be installed between the uninterrupted seal retainer face and the pipeline flange.

- **Integral Shaft-to-Valve Body Bonding—** Standard valve construction includes conductive packing to provide electrical bonding for hazardous area applications.

- **Powder paint as standard—** The Emerson Process Management™ powder paint finish offers an excellent corrosion-resistant finish to all steel parts.

- **High Temperature Capability—** The valve will operate at elevated temperatures, with the appropriate trim components.

- **Shaft Retention—** Redundant shaft retention provides added protection. The packing follower, anti-blowout ring, and shaft groove interact to hold the shaft securely in the valve body (see figure 1).

- **Travel Indication—** Additional travel indication can be achieved by using the indication line on the shaft, along with the disk position markings on the packing follower (see figure 4).

Table of Contents

Control-Disk Valve Features 1
Control-Disk Valve Specifications and Materials of Construction 3
2052 Actuator Specifications and Materials of Construction 15
2052 Actuator Features 18

Control-Disk Valve Specifications and Materials of Construction

Table 1. Fisher Control-Disk Valve Specifications

Specifications		EN	ASME
Valve Body Size		DN 50, 80, 100, 150, 200, 250, and 300	NPS 2, 3, 4, 6, 8, 10, and 12
Pressure Rating		PN 10 to 40 per EN 12516-1	CL150 / 300 per ASME B16.34
Valve Body Materials		EN 1.0619 steel	WCC steel
		EN 1.4409 stainless steel	CF3M (316L) stainless steel
		LCC	LCC
		CW2M(1)	CW2M(1)
		M35-2(2)	M35-2
Disk Materials	PTFE or RPTFE(4) Seal	EN 1.4409 stainless steel	CF3M stainless steel
		CW2M	CW2M
		M35-2	M35-2
	Metal or UHMWPE(3) Seal	Chrome-plated EN 1.4409 Stainless Steel	Chrome-plated CF3M Stainless Steel
End Connections		Mates with raised-face flanges per EN 1092-1	Mates with raised-face flanges per ASME B16.5
Valve Body Style		Wafer (flangeless) and single flange with tapped or through holes(5)	
Face-to-Face Dimensions		Meets MSS SP68, API 609, and EN 558 standards	
Shutoff		PTFE, RPTFE, or UHMWPE seal ring - Class VI per ANSI/FCI 70-2 and IEC 60534-4	
		S31600 (316 SST) seal ring - 1% of Class IV per ANSI/FCI 70-2 and IEC 60534-4	
Flow Coefficients		See Fisher Catalog 12	
Flow Direction		Standard (forward flow) is with the seal retainer facing upstream; reverse flow is permissible for soft seals only	
Flow Characteristic		Equal percentage	
Disk Rotation		Counterclockwise to open (when viewed from actuator side of valve body) through 90 degrees of disk rotation	
Shaft Diameters and Approximate Weights		See table 8	

1. This material is not listed in EN 12516-1 or ASME B16.34. See figure 6 for pressure/temperature ratings.
2. This material is not listed in EN 12516-1. See figure 6 for pressure/temperature ratings.
3. UHMWPE stands for ultra high molecular weight polyethylene.
4. RPTFE is a reinforced PTFE seal.
5. LCC construction is standard in wafer style only. Consult your Emerson Process Management sales office for single flange valve body style information.

Table 2. Materials (Other Valve Components)

Component	Material
Shafts and Pins	S17400 (17-4PH) stainless steel, S20910 (XM-19) stainless steel, N10276, N05500
Anti-blowout Ring	N07718
Seal	PTFE, RPTFE, or UHMWPE with S31600 (316 stainless steel) or R30003 spring. Metal seal is 316 stainless steel with graphite gaskets
Bearings	PEEK/PTFE, R30006 (Alloy 6), S31600 Nitride
Packing	PTFE/carbon-filled PTFE (standard), graphite die-molded ribbon, ENVIRO-SEAL PTFE packing, ENVIRO-SEAL graphite packing
Follower Spring	N07718 with carbon-filled PEEK or S31600 spring seats
Bolting	B8M Class 2, B7M, N05500, N07718
Nuts	8M, 2HM, N04400, N10276

Table 3. Trim Combinations with Standard Construction Materials

Valve Body Material	Shaft Material	Disk Material	Bearings	Seal Material
1.0619 & WCC	S17400 H1075	1.4409 & CF3M	PEEK/PTFE	PTFE or RPTFE
		1.4409 & CF3M Chrome-Plated	PEEK/PTFE	UHMWPE or Metal
			Alloy 6 or S31600 Nitride	Metal
LCC	S17400 H1075	1.4409 & CF3M	PEEK/PTFE	PTFE
1.4409 & CF3M	S20910	1.4409 & CF3M	PEEK/PTFE	PTFE or RPTFE
		1.4409 & CF3M Chrome-Plated	PEEK/PTFE	UHMWPE or Metal
			Alloy 6 or S31600 Nitride	Metal
CW2M	N10276	CW2M	PEEK/PTFE	PTFE or RPTFE
M35-2	N05500	M35-2	PEEK/PTFE	PTFE or RPTFE

Figure 1. Typical Fisher Control-Disk Valve Construction Detail

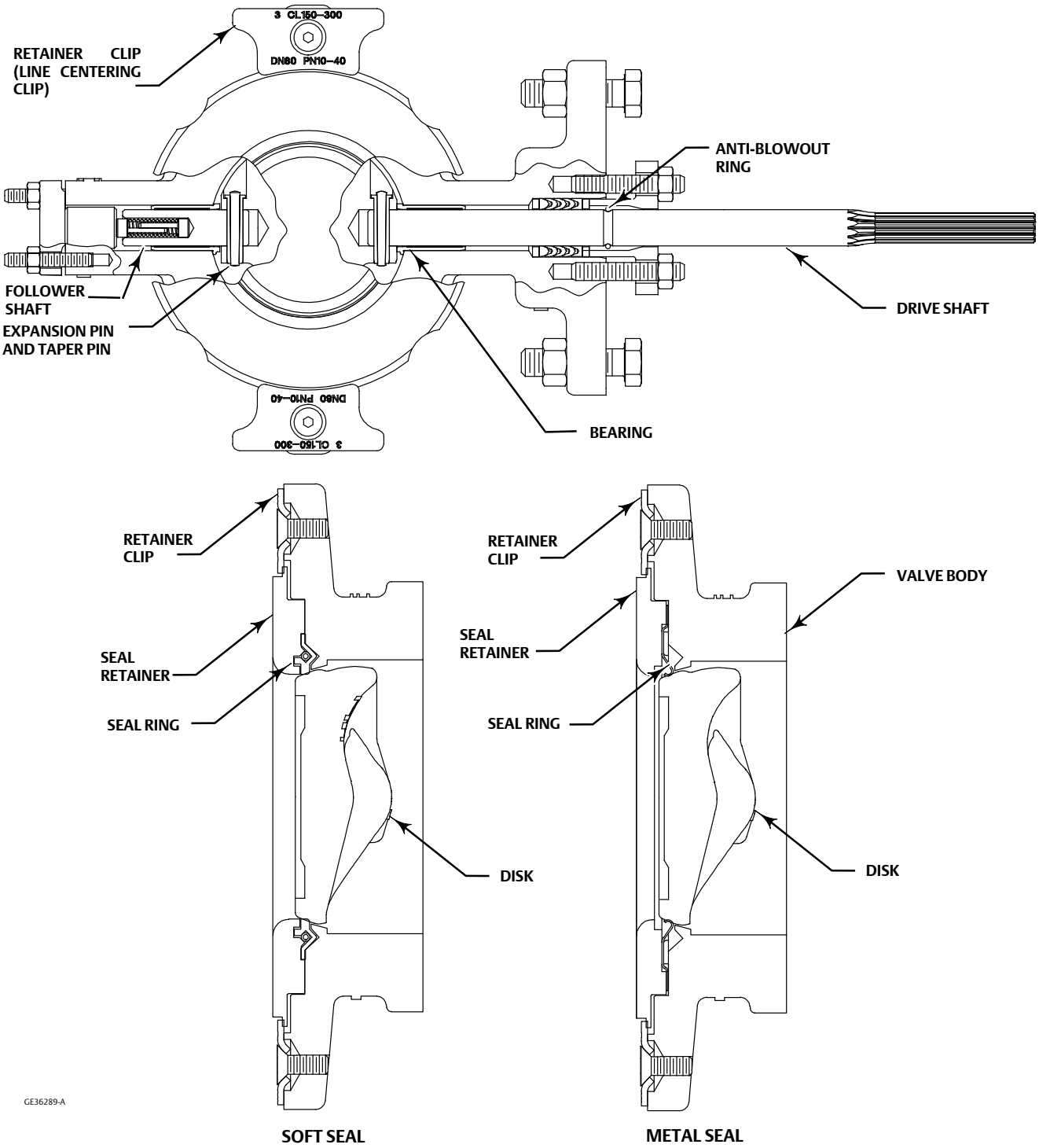

Figure 2. Comparison of Disk Action

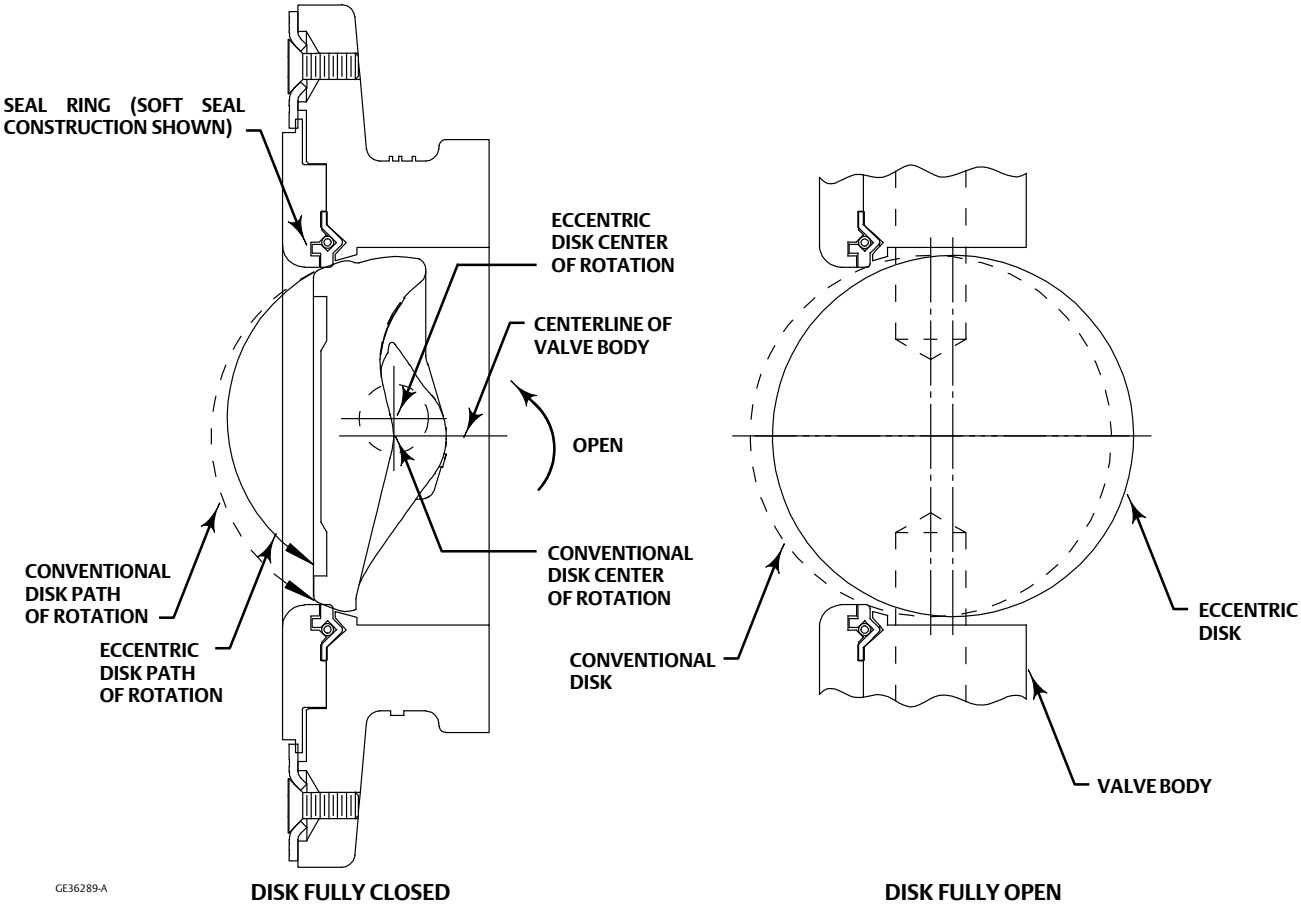

Figure 3. Available Seal Configuration

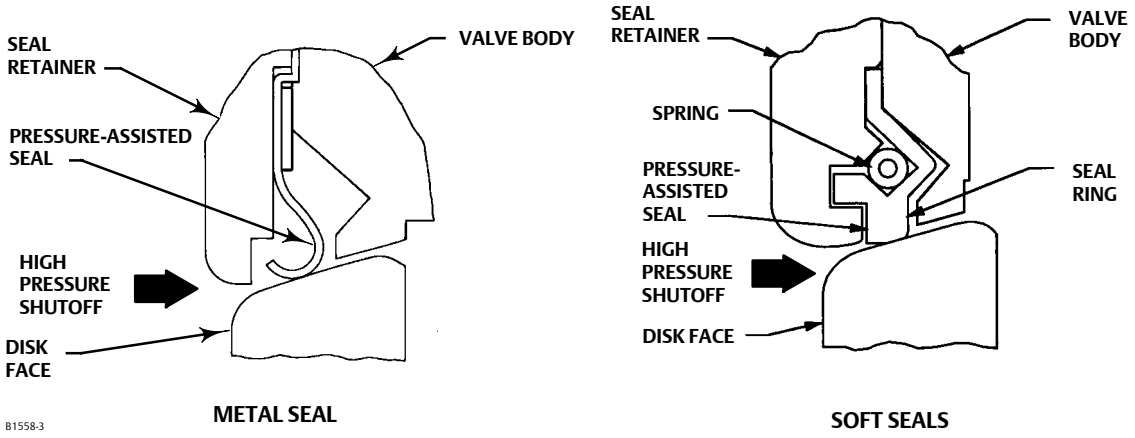

Figure 4. Travel Indication

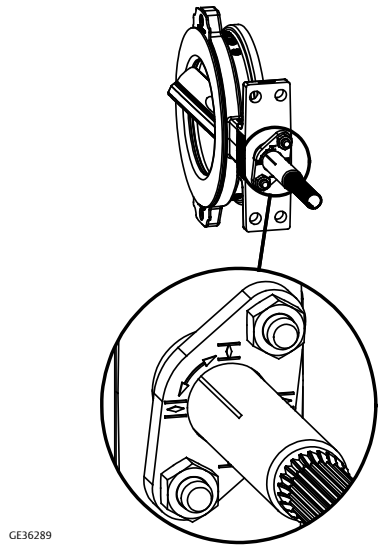

Table 4. Material Temperature Capabilities

MATERIAL					TEMPERATURE LIMITS	
PN FLANGES						
Valve Body	**Shaft**	**Bearing Lining and Jacket**	**Seal**	**Packing**	**°C**	**°F**
1.0619 Steel	S17400 or S20910	PEEK / PTFE	PTFE or RPTFE	PTFE or Graphite	–10 to 232	14 to 450
			UHMWPE	PTFE or Graphite	–10 to 93	14 to 200
			Metal	PTFE	–10 to 232	14 to 450
				Graphite	–10 to 260	14 to 500
		R30006 (Alloy 6) or S31600 Nitride	Metal	Graphite	–10 to 400(1)	14 to 752(1)
LCC	S17400 or S20910	PEEK / PTFE	PTFE	PTFE	–46 to 232	–50 to 450
1.4409 Stainless Steel	S20910	PEEK / PTFE	PTFE or RPTFE	PTFE or Graphite	–46 to 232	-50 to 450
			UHMWPE	PTFE or Graphite	–18 to 93	0 to 200
			Metal	PTFE	–46 to 232	-50 to 450
				Graphite	–46 to 260	-50 to 500
		R30006 (Alloy 6) or S31600 Nitride	Metal	Graphite	–46 to 500(1)	-50 to 932(1)
CW2M	N10276	PEEK / PTFE	PTFE or RPTFE	PTFE	–10 to 232	14 to 450
M35-2	N05500	PEEK / PTFE	PTFE or RPTFE	PTFE	–10 to 232	14 to 450
ASME FLANGES						
Valve Body	**Shaft**	**Bearing Lining and Jacket**	**Seal**	**Packing**	**°C**	**°F**
WCC steel	S17400 or S20910	PEEK / PTFE	PTFE or RPTFE	PTFE or Graphite	–29 to 232	-20 to 450
			UHMWPE	PTFE or Graphite	–18 to 93	0 to 200
			Metal	PTFE	–29 to 232	-20 to 450
				Graphite	–29 to 260	-20 to 500
		R30006 (Alloy 6) or S31600 Nitride	Metal	Graphite	–29 to 427(1)	-20 to 800(1)
LCC	S17400 or S20910	PEEK / PTFE	PTFE	PTFE	–46 to 232	–50 to 450
CF3M Stainless Steel	S20910	PEEK / PTFE	PTFE or RPTFE	PTFE or Graphite	–46 to 232	–50 to 450
			UHMWPE	PTFE or Graphite	–18 to 93	0 to 200
			Metal	PTFE	–46 to 232	–50 to 450
				Graphite	–46 to 260	–50 to 500
		R30006 (Alloy 6) or S31600 Nitride	Metal	Graphite	–46 to 454(1)	–50 to 850(1)
CW2M	N10276	PEEK / PTFE	PTFE or RPTFE	PTFE	–46 to 232	–50 to 450
M35-2	N05500	PEEK / PTFE	PTFE or RPTFE	PTFE	–46 to 232	–50 to 450

1. For applications exceeding 316°C (600°F), consult your Emerson Process Management sales office for appropriate disk material selection.

Figure 5. Material Pressure/Temperature Curves

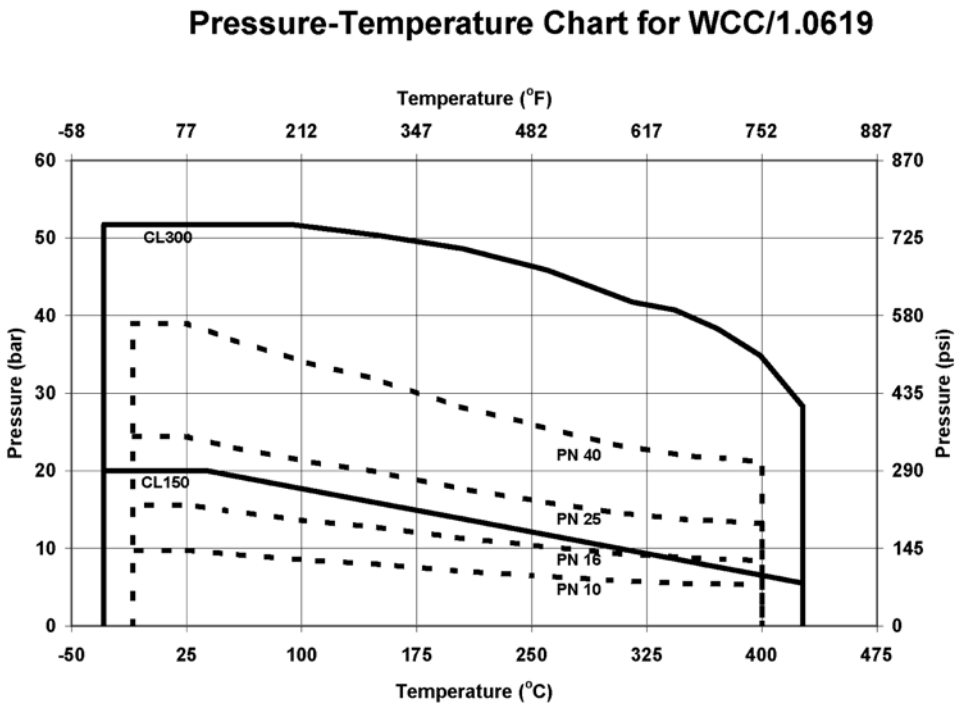

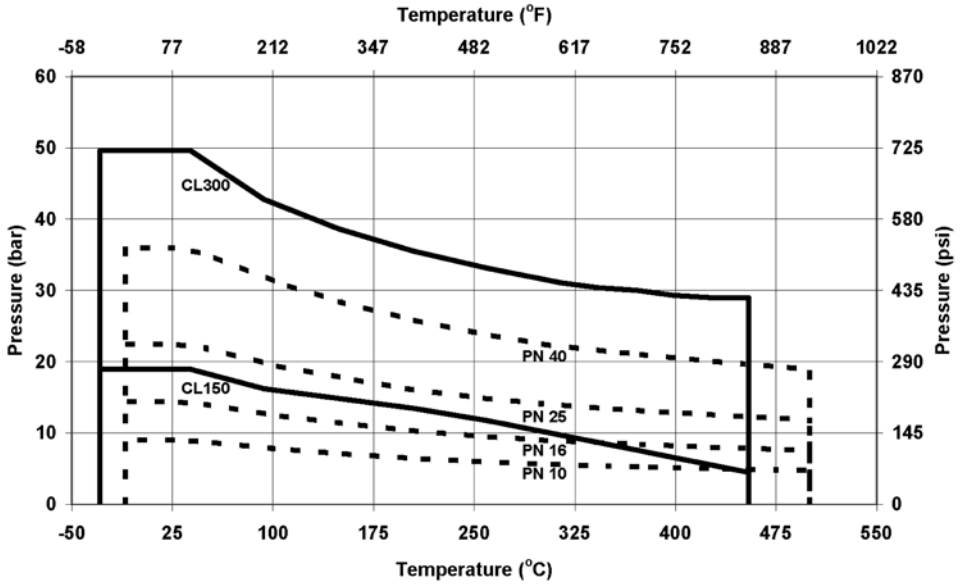

Figure 6. Material Pressure/Temperature Curves

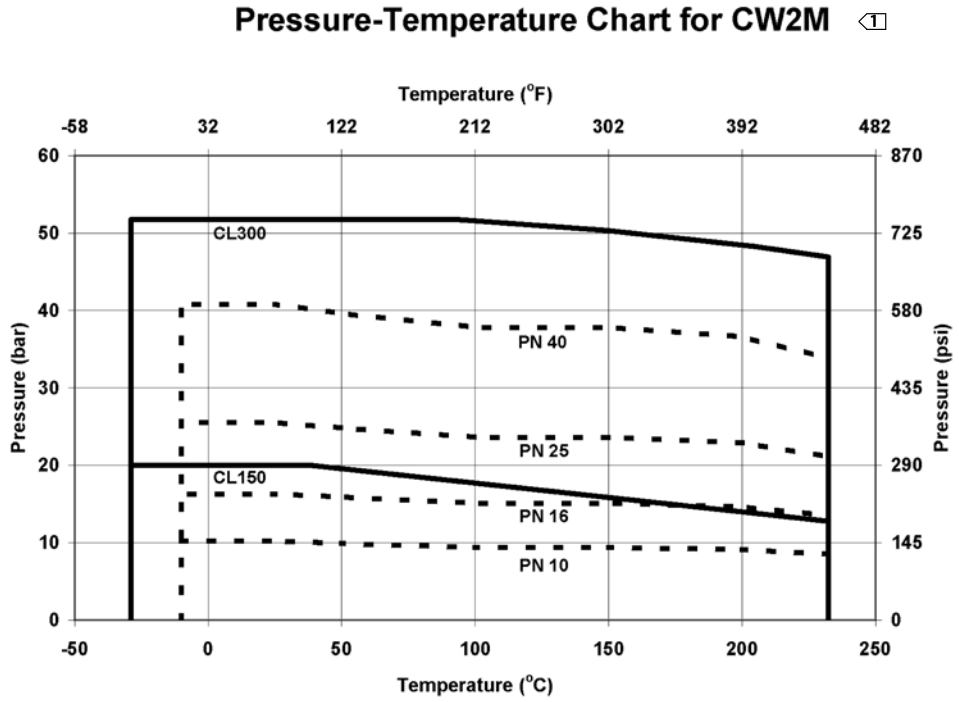

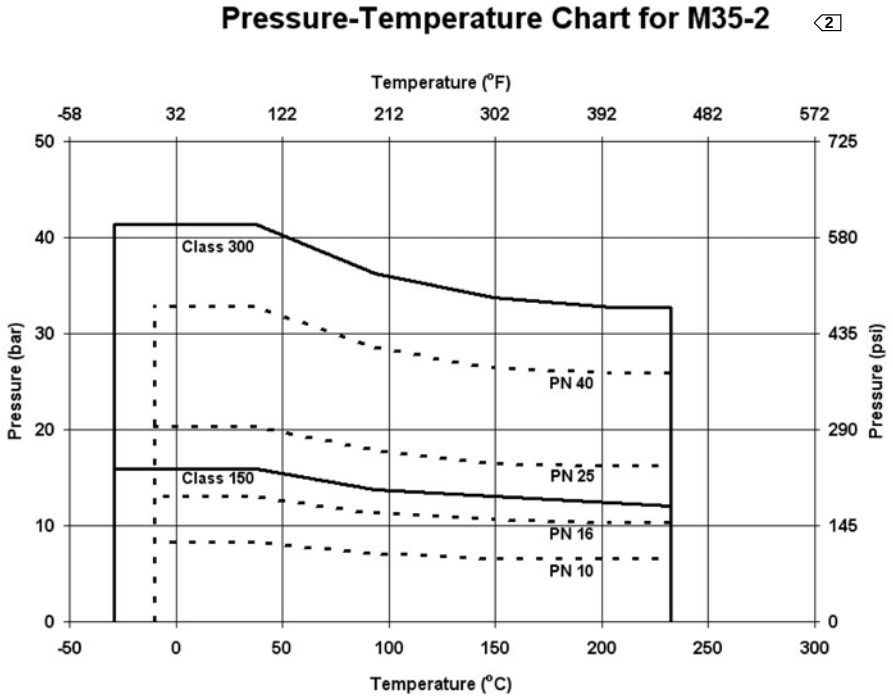

1. CW2M is not listed in EN 12516-1 or ASME B16.34. The PN and CL designations are used only to indicate relative pressure-retaining capabilities.
2. M35-2 is not listed in EN 12516-1. The PN designations are used only to indicate relative pressure-retaining capabilities.

Figure 7. Material Pressure/Temperature Curves

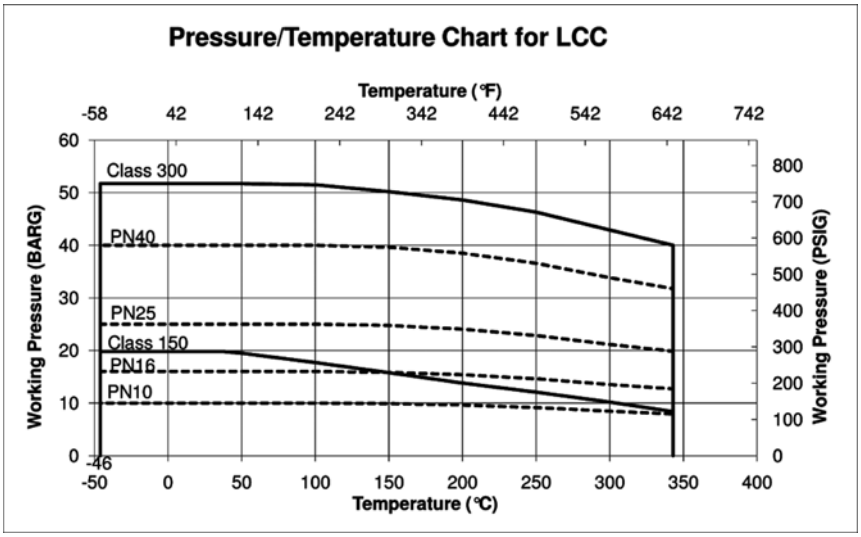

E1140

Table 5. Maximum Allowable Shutoff Pressure Drops based on Trim (Seal, Shaft, and Bearings), Bar

Note: Do not exceed the EN or ASME pressure/temperature rating of the valve or mating flanges.

TRIM	TEMPERATURE, °C	DN						
		50	80	100	150	200	250	300
		Bar						
PTFE or RPTFE Seal PEEK/PTFE Bearings	-46 to 65	51.7	51.7	51.7	51.7	51.7	35.2	41.4
	93	48.5	48.5	48.5	48.5	48.5	35.0	38.8
	121	38.6	38.6	38.6	38.6	38.6	33.8	35.7
	149	28.7	28.7	28.7	28.7	28.7	28.7	28.7
	191	13.8	13.8	13.8	13.8	13.8	13.8	13.8
	204	10.3	10.3	10.3	10.3	10.3	10.3	10.3
	232	3.4	3.4	3.4	3.4	3.4	3.4	3.4
UHMWPE Seal PEEK/PTFE Bearings	-17 to 37	51.7	51.7	51.7	51.7	51.7	35.2	41.4
	66	38.6	38.6	38.6	38.6	38.6	35.1	38.6
	93	25.9	25.9	25.9	25.9	25.9	25.9	25.9
Metal Seal(1) Alloy 6 Bearings	-46 to 37	18.5	16.5	13.9	12.8	11.0	6.8	7.0
	93	17.0	15.1	12.8	11.7	10.1	6.3	6.5
	149	16.0	14.2	12.0	11.0	9.4	5.9	6.1
	204	15.1	13.4	11.4	10.4	9.0	5.6	5.7
	260	14.3	12.8	10.8	9.9	8.5	5.3	5.4
	316	13.8	12.3	10.3	9.5	8.2	5.1	5.2
	371	13.2	11.9	10.0	9.2	7.9	5.0	5.0
	427	12.5	11.6	9.8	9.0	7.7	4.8	5.0
	454	12.1	11.5	9.7	8.9	7.7	4.8	4.9
Metal Seal(1) S31600/Nitride Bearings	-46 to 37	19.5	28.2	26.1	20.8	31.0	15.5	8.0
	93	19.3	28.0	26.0	20.6	31.0	15.4	7.9
	149	17.0	25.4	23.7	18.7	28.8	14.0	7.1
	204	15.9	24.3	22.7	17.8	26.3	13.3	6.8
	260	14.5	22.9	21.4	16.8	24.6	12.5	6.3
	316	13.8	22.1	20.8	16.2	23.2	12.1	6.1
	371	13.2	21.5	20.2	15.7	22.4	11.8	5.9
	427	12.5	20.7	19.5	15.2	21.8	11.4	5.6
	454	12.1	20.3	19.2	14.9	21.6	11.2	5.4
Metal Seal(1) PEEK/PTFE Bearings	-46 to 37	51.7	51.7	51.7	51.7	31.0	17.2	17.2
	93	51.7	51.7	51.7	51.7	31.0	17.2	17.2
	149	50.3	50.3	50.3	50.3	31.0	17.2	17.2
	204	48.6	48.6	48.6	48.2	31.0	17.2	17.2
	232	47.2	47.2	46.3	42.6	31.0	17.2	17.2
	260	24.7	21.9	18.5	17.0	14.6	9.1	9.4

1. Pressure drops shown for metal seals are for forward flow only.

Table 6. Maximum Allowable Shutoff Pressure Drops based on Trim (Seal, Shaft, and Bearings), Psi

Note: Do not exceed the EN or ASME pressure/temperature rating of the valve or mating flanges.

TRIM	TEMPERATURE, °F	NPS						
		2	3	4	6	8	10	12
		Psi						
PTFE or RPTFE Seal PEEK/PTFE Bearings	-50 to 150	750	750	750	750	750	511	600
	200	704	704	704	704	704	508	563
	250	560	560	560	560	560	490	518
	300	416	416	416	416	416	416	416
	375	200	200	200	200	200	200	200
	400	150	150	150	150	150	150	150
	450	50	50	50	50	50	50	50
UHMWPE Seal PEEK/PTFE Bearings	0 to 100	750	750	750	750	750	511	600
	150	560	560	560	560	560	509	560
	200	375	375	375	375	375	375	375
Metal Seal(1) Alloy 6 Bearings	-50 to 100	268	239	202	185	159	99	102
	200	246	219	185	170	146	91	94
	300	232	206	174	160	137	86	88
	400	219	195	165	151	130	81	83
	500	208	186	157	144	124	77	79
	600	200	178	150	138	119	74	76
	700	192	172	145	134	115	72	73
	800	181	168	142	130	112	70	72
	850	176	167	141	129	111	69	71
Metal Seal(1) S31600/Nitride Bearings	-50 to 100	283	409	379	301	450	225	116
	200	280	406	377	299	450	223	115
	300	246	369	344	271	417	203	103
	400	230	352	329	258	382	193	98
	500	211	332	311	243	357	182	91
	600	200	321	301	235	337	176	88
	700	192	312	293	228	325	171	85
	800	181	300	283	220	316	165	81
	850	176	295	278	216	313	162	79
Metal Seal(1) PEEK/PTFE Bearings	-50 to 100	750	750	750	750	450	250	250
	200	750	750	750	750	450	250	250
	300	730	730	730	730	450	250	250
	400	705	705	705	699	450	250	250
	450	685	685	672	618	450	250	250
	500	358	318	269	247	212	132	136

1. Pressure drops shown for metal seals are for forward flow only.

Table 7. Maximum Shutoff Pressure Drops with Soft Seal and PEEK/PTFE Bearings and Fisher 2052 Actuator

VALVE SIZE	ACTUATOR SIZE	MAXIMUM SHUTOFF PRESSURE DROP, BAR	
DN		2 bar Operating Pressure	4 bar Operating Pressure
50	1	29.0	51.7
80		9.4	37.3
100		---	15.4
80	2	51.7	51.7
100		48.6	51.7
150		14.8	42.6
200		3.2	16.6
100	3 (PDTO)	51.7	51.7
150		51.7	51.7
200		31.4	51.7
250		15.6	35.2
300		7.8	22.7
100	3 (PDTC)	51.7	51.7
150		51.7	51.7
200		25.5	51.7
250		12.1	35.2
300		5.6	20.4
VALVE SIZE	**ACTUATOR SIZE**	**MAXIMUM SHUTOFF PRESSURE DROP, PSIG**	
NPS		**29 psig**	**58 psig Operating Pressure**
2	1	420	750
3		136	541
4		---	223
3	2	750	750
4		705	750
6		214	618
8		46.9	241
4	3 (PDTO)	750	750
6		750	750
8		455	750
10		226	511
12		114	329
4	3 (PDTC)	750	750
6		750	750
8		370	750
10		176	511
12		80.7	296

Table 8. Dimensions and Weights

VALVE SIZE, PRESSURE RATING		A	E	F		G		K	R	S(1)	T	U	W	APPROXIMATE WEIGHT(2)	
				Wafer	Single Flange	Wafer	Single Flange							Wafer	Single Flange
		mm												kg	
DN50/ NPS 2	PN10-40/ CL150-300	43	187.5	150	- - -	109	- - -	125	102	12.7	117	- - -	14	4.7	6.7
DN80/ NPS 3	PN10-40/ CL150-300	47/48 (3)	187.5	196	196	133	133	130	134	15.9	117	- - -	14	7.5	11.2
DN100/ NPS 4	PN10-40/ CL150-300	53	214.4	222	226	122	147	172	162	19.1	152	32	14	12.5	17.6
DN150/ NPS 6	PN10-40/ CL150-300	57	214.4	270	300	147	182	205	218	25.4	152	32	14	15.7	26.5
DN200/ NPS 8	PN10-16/ CL150	61	208	327	342	225	225	258	271	31.8	235	46	18	30.2	40.2
	PN25-40	61	208	358	364	225	225	258	285	31.8	235	46	18	33.9	46.0
	CL300	73													
DN250/ NPS 10	PN10-16/ CL150	69	208	390	395	218	250	270	324	31.8	235	46	18	38.9	50.5
	PN25-40	69	208	400	450	265	265	270	345	31.8	235	46	18	51.8	79.2
	CL300	83													
DN300/ NPS 12	PN10-16/ CL150	78	208	381	467	309	309	304	381	38.1	235	46	18	68.7	98.3
	PN25-40	78	208	410	512	309	309	304	410	38.1	235	46	18	76.6	104.6
	CL300	92													
		Inches												lbs	
DN50/ NPS 2	PN10-40/ CL150-300	1.69	7.38	5.91	- - -	4.29	- - -	4.92	4.02	0.50	4.62	- - -	0.55	10	15
DN80/ NPS 3	PN10-40/ CL150-300	1.85/ 1.89 (3)	7.38	7.72	7.72	5.24	5.24	5.12	5.28	0.63	4.62	- - -	0.55	17	25
DN100/ NPS 4	PN10-40/ CL150-300	2.09	8.44	8.74	8.90	4.80	5.79	6.77	6.38	0.75	6.00	1.25	0.55	28	39
DN150/ NPS 6	PN10-40/ CL150-300	2.24	8.44	10.63	11.81	5.79	7.17	8.07	8.58	1.00	6.00	1.25	0.55	35	58
DN200/ NPS 8	PN10-16/ CL150	2.40	8.19	12.87	13.46	8.86	8.86	10.16	10.67	1.25	9.25	1.81	0.71	67	89
	PN25-40	2.40	8.19	14.09	14.33	8.86	8.86	10.16	11.22	1.25	9.25	1.81	0.71	75	102
	CL300	2.87													
DN250/ NPS 10	PN10-16/ CL150	2.72	8.19	15.35	15.55	8.58	9.84	10.63	12.76	1.25	9.25	1.81	0.71	86	111
	PN25-40	2.72	8.19	15.75	17.72	10.43	10.43	10.63	13.58	1.25	9.25	1.81	0.71	114	175
	CL300	3.27													
DN300/ NPS 12	PN10-16/ CL150	3.07	8.19	15.00	18.39	12.17	12.17	11.97	15.00	1.50	9.25	1.81	0.71	151	217
	PN25-40	3.07	8.19	16.14	20.16	12.17	12.17	11.97	16.14	1.50	9.25	1.81	0.71	169	231
	CL300	3.62													

1. This nominal valve shaft diameter is the shaft diameter through the packing box. Use this diameter when selecting Fisher actuators.
2. Valve assembly only.
3. 48 mm for CL150 and CL300 single flange only.

Table 9. Line Bolting Dimensions

VALVE SIZE	Y					
	Pressure Rating					
	CL150	CL300	PN10	PN16	PN25	PN40
DN80 / NPS 3	4X 5/8-11	8X 3/4-10	8X M20X2.5			
DN100 / NPS 4	8X 5/8-11	8X 3/4-10	8X M16X2		8X M20X2.5	
DN150 / NPS 6	8X 3/4-10	12X 3/4-10	8X M20X2.5		8X M24X3(1)	
DN200 / NPS 8	8X 3/4-10	12X 7/8-9	8X M20X2.5	12X M20X2.5	12X M24X3	12X M27X3(1)
DN250 / NPS 10	12X 7/8-9	16X 1-8	12X M20X2.5	12X M24X3	12X M27X3	12X M30X3.5(1)
DN300 / NPS 12	12X 7/8-9	16X 1-1/8-8	12X M20X2.5	12X M24X3	16X M27X3	16X M30X3.5

1. Not available in single flange with threaded holes.

Figure 8. Dimensions for Fisher Control-Disk Valve, Single Flange

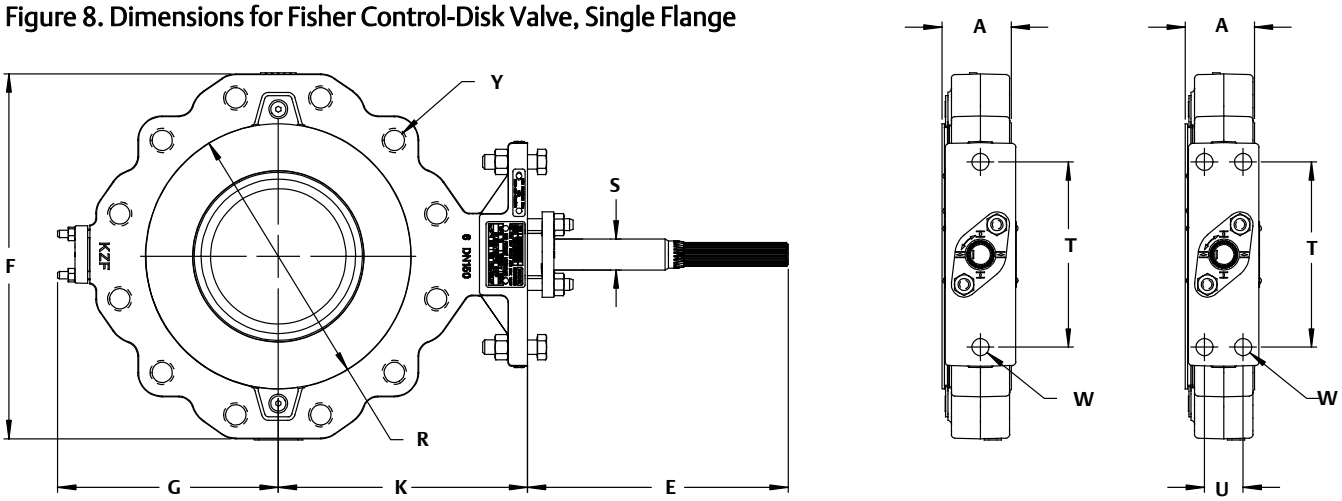

Figure 9. Dimensions for Fisher Control-Disk Valve, Wafer Style

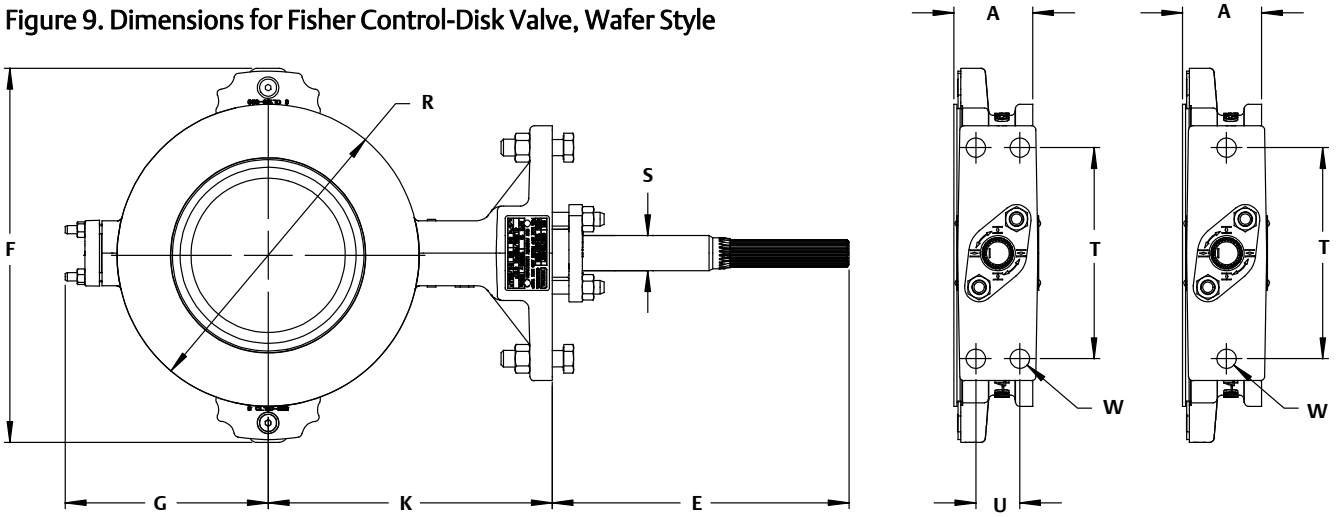

2052 Actuator Specifications and Materials of Construction

Table 10. Fisher 2052 Actuator Specifications

Specifications	
Actuator Mounting Connections	Splined shaft connection, ISO 5211 actuator-to-bracket connection **Size 1:** F07, **Size 2:** F10, **Size 3:** F14
Actuator Sizes	See bulletin 61.1:2052
Operating Pressure(1)	See bulletin 61.1:2052
Maximum Diaphragm Casing Pressure	Size 1, 2, and 3 Actuators: 5 barg (73 psig)
Pressure Connection	See bulletin 61.1:2052
Torque Output	See bulletin 61.1:2052
Actuator Temperature Capabilities(1)	-46 to 80°C (-50 to 176°F)
Operation	Field reversible between PDTC and PDTO; right- and left-hand mounting, any angle of orientation
Approximate Weight	Size 1: 22.2 kg (49 lb) Size 2: 54.4 kg (120 lb) Size 3: 113 kg (250 lb)
Controller/Positioners Available	DVC2000, DVC6200, 3610J, 3620J, 4190, C1
Accessories Available	846, 646, 2625, and 67C Series, switches, i2P-100, VBL, DXP, GO ™
Handwheel	Top-mounted handwheel: Optional on Size 1 and 2 actuators only Declutchable handwheel: Optional on Size 1, 2, and 3 actuators
Operational Lockout	Available for customer-supplied padlock to lock the actuator in the spring-fail position

1. The pressure/temperature limits in this bulletin and any applicable standard or code limitation for valve should not be exceeded.

Table 11. Materials of Construction

Component	Material
Top Casing	Steel
Housing	Cast Iron
Diaphragm	Nitrile and nylon standard
Lever	Ductile iron
Diaphragm Plate	Cast iron
OPTIONAL TOP-MOUNTED HANDWHEEL ASSEMBLY	
Component	**Material**
Handwheel	Cast iron
Handwheel Stem	Aluminum-Bronze
Top Casing Assembly	Steel
O-ring	Nitrile
Pusher Plate	Steel

Table 12. Fisher Control-Disk Valve Breakout Torque Requirements

TRIM CONFIGURATION: SOFT SEAL WITH PEEK/PTFE BEARINGS										
VALVE SIZE	SHAFT DIA	TORQUE, N•m								
		Shutoff $\triangle P_{max}$								
DN	mm	3 bar	7 bar	10 bar	15 bar	20 bar	25 bar	35 bar	45 bar	50 bar
50	12.7	12.8	14.7	16.2	18.7	21.1	23.6	28.5	33.4	35.9
80	15.9	19.7	23.4	26.1	30.7	35.3	39.9	49.1	58.2	62.8
100	19.1	31.1	37.6	42.4	50.5	58.7	66.8	83.0	99.2	107
150	25.4	60.8	75.9	87.2	106	125	144	181	219	238
200	31.8	103	135	158	198	237	276	355	434	473
250	31.8	159	212	252	318	385	451	584	---	---
300	38.1	228	310	371	473	576	678	883	---	---
VALVE SIZE	SHAFT DIA	TORQUE, Lbf•in								
		Shutoff $\triangle P_{max}$								
NPS	Inch	50 psid	100 psid	150 psid	200 psid	300 psid	400 psid	500 psid	600 psid	750 psid
2	1/2	115	130	145	160	190	220	250	280	325
3	5/8	178	206	234	262	318	374	430	486	570
4	3/4	282	331	381	430	529	628	727	826	975
6	1	553	668	783	900	1130	1360	1590	1820	2160
8	1-1/4	945	1190	1430	1670	2150	2630	3110	3590	4310
10	1-1/4	1460	1870	2270	2680	3490	4300	5110	---	---
12	1-1/2	2100	2720	3350	3970	5220	6470	7720	8970	---
TRIM CONFIGURATION: METAL SEAL WITH METAL BEARINGS										
VALVE SIZE	SHAFT DIA	TORQUE, N•m								
		Shutoff $\triangle P_{max}$								
DN	mm	3 bar	7 bar	10 bar	15 bar	20 bar	25 bar	35 bar	45 bar	50 bar
50	12.7	37.3	42.4	46.2	52.5	---	---	---	---	---
80	15.9	67.7	78.9	87.3	101	115	129	---	---	---
100	19.1	112	134	151	178	206	233	---	---	---
150	25.4	241	292	331	395	458	---	---	---	---
200	31.8	310	422	506	646	786	927	---	---	---
250	31.8	598	761	884	1090	---	---	---	---	---
300	38.1	926	1270	---	---	---	---	---	---	---
VALVE SIZE	SHAFT DIA	TORQUE, Lbf•in								
		Shutoff $\triangle P_{max}$								
NPS	Inch	50 psid	100 psid	150 psid	200 psid	300 psid	400 psid	500 psid	600 psid	750 psid
2	1/2	336	374	413	451	---	---	---	---	---
3	5/8	611	696	782	867	1040	1210	---	---	---
4	3/4	1020	1180	1350	1520	1850	---	---	---	---
6	1	2190	2580	2970	3360	4140	---	---	---	---
8	1-1/4	2860	3710	4570	5420	7130	8840	---	---	---
10	1-1/4	5450	6700	7950	9200	---	---	---	---	---
12	1-1/2	8540	11200	---	---	---	---	---	---	---

Table 13. Fisher 2052 Preferred Actuator Based On Actuator Torque Output

TRIM CONFIGURATION: SOFT SEAL WITH PEEK/PTFE BEARINGS										
VALVE SIZE	**SHAFT DIA**	**ΔP_{max}**								
DN	**mm**	**3 bar**	**7 bar**	**10 bar**	**15 bar**	**20 bar**	**25 bar**	**35 bar**	**45 bar**	**50 bar**
50	12.7	Size 1								
80	15.9	Size 1							Size 2	
100	19.1	Size 1				Size 2				
150	25.4	Size 2							Size 3	
200	31.8	Size 2				Size 3				
250	31.8	Size 2	Size 3						NA	
300	38.1	Size 3					NA			
VALVE SIZE	**SHAFT DIA**	**ΔP_{max}**								
NPS	**Inch**	**50 psid**	**100 psid**	**150 psid**	**200 psid**	**300 psid**	**400 psid**	**500 psid**	**600 psid**	**750 psid**
2	1/2	Size 1								
3	5/8	Size 1							Size 2	
4	3/4	Size 1				Size 2				
6	1	Size 2								Size 3
8	1-1/4	Size 2				Size 3				
10	1-1/4	Size 2	Size 3						NA	
12	1-1/2	Size 3					NA			
TRIM CONFIGURATION: METAL SEAL WITH METAL BEARINGS										
VALVE SIZE	**SHAFT DIA**	**ΔP_{max}**								
DN	**mm**	**3 bar**	**7 bar**	**10 bar**	**15 bar**	**20 bar**	**25 bar**	**35 bar**	**45 bar**	**50 bar**
50	12.7	Size 1			Size 2	NA				
80	15.9	Size 2						NA		
100	19.1	Size 2					Size 3	NA		
150	25.4	Size 3					NA			
200	31.8	Size 3			NA					
250	31.8	Size 3	NA							
300	38.1	NA								
VALVE SIZE	**SHAFT DIA**	**ΔP_{max}**								
NPS	**Inch**	**50 psid**	**100 psid**	**150 psid**	**200 psid**	**300 psid**	**400 psid**	**500 psid**	**600 psid**	**750 psid**
2	1/2	Size 1			Size 2	NA				
3	5/8	Size 2						NA		
4	3/4	Size 2					NA			
6	1	Size 3					NA			
8	1-1/4	Size 3				NA				
10	1-1/4	Size 3	NA							
12	1-1/2	NA								

2052 Actuator Features

- **Compact design, smaller actuators—** Ensures reduced valve/actuator envelope dimensions leading to greater mounting versatility for both skids and process plants, where space is at a premium.

- **Compatible with DVC6200 and DVC2000 digital valve controllers; and 3610J and 3620J positioners—** The new actuator allows linkage-less feedback via a contact-less magnetic array, from the lever to the window-mounted DVC6200 or end-mounted DVC2000. Integral window mounting of the 3610J and 3620J is also available.

- **Clamped lever to reduce lost motion—** The clamping of the lever onto a splined valve shaft, coupled with the single pivot linkage, reduces lost motion between the actuator and the valve. The typical cumulative deadband for a Fisher rotary control valve assembly results in 0.5% or less variability.

- **No bench set required—** The new nested spring design requires no bench set. This also simplifies the actuator selection process, see bulletin 61.1:2052, D103295X012.

- **ISO 5211 mounting with optional insert—** The actuator can now be mounted directly onto non-spline shafts, such as Square and Double D. This allows the actuator, with its enhanced control, to mount on a wider range of valves conforming to ISO 5211.

- **Adjustable travel stops standard with optional lockout feature—** Provides the ability to adjust or change the travel range without removing the actuator or the addition of extra parts. The optional lockout feature locks the lever in the spring-fail position.

- **Fail-safe mechanism contains no aluminum—** All parts in the fail-safe mechanism (made of steel, cast iron, and ductile iron) ensure the actuator will maintain safety integrity in the event of a fire.

- **Powder paint as standard—** The Emerson Process Management powder paint finish offers an excellent corrosion-resistant finish to all external steel and cast iron parts.

- **NAMUR VDE/VDI 3845 for accessory mounting—** Meeting the global standard ensures compatibility for most accessories, enabling quick and easy mounting.

- **Field reversible, right- or left-hand mounting—** The actuator/valve assembly action can be converted from push-down-to-open to push-down-to-close, or vice-versa, without additional parts.

- **Declutchable and top-mounted handwheels—** Available (except top-mounted not available for size 3 actuator).

Options

Top-Mounted Handwheel: For infrequent use as a manual actuator (see bulletin 61.1:2052, D103295X012). For repeated or daily manual operation, the unit should be equipped with a declutchable handwheel actuator.

Declutchable Handwheel Actuator: An end-mounted manual actuator can be used to provide on-site control and to provide override capabilities. See bulletin 61.8:1078 for handwheel actuator specifications.

Limit Switches: ■ Micro-Switch or NAMCO switches for one or two single-pole, double-throw contacts, or ■ GO proximity switches for one or two single-pole, double-throw contacts are available. See separate bulletins for limit switch information.

Position Indicating Switch: TopWorx™ DXP M21GNEB switch for one through six single pole, double throw switch contacts are available. See separate bulletin for position indicating switch information.

Positioner: For precise positioning of the valve control element, the actuator should be equipped with a positioner. For additional information, contact your Emerson Process Management sales office with complete service conditions.

Actuator Locking Mechanism: An actuator locking mechanism is available, which can be used to keep the actuator in a locked position (the same as the spring-fail position) during maintenance. The padlock is customer supplied.

Neither Emerson, Emerson Process Management, nor any of their affiliated entities assumes responsibility for the selection, use or maintenance of any product. Responsibility for proper selection, use, and maintenance of any product remains solely with the purchaser and end user.

Fisher, Control-Disk, ENVIRO-SEAL, GO, and TopWorx are marks owned by one of the companies in the Emerson Process Management business unit of Emerson Electric Co. Emerson Process Management, Emerson, and the Emerson logo are trademarks and service marks of Emerson Electric Co. All other marks are the property of their respective owners.

The contents of this publication are presented for informational purposes only, and while every effort has been made to ensure their accuracy, they are not to be construed as warranties or guarantees, express or implied, regarding the products or services described herein or their use or applicability. All sales are governed by our terms and conditions, which are available upon request. We reserve the right to modify or improve the designs or specifications of such products at any time without notice.

Emerson Process Management
Marshalltown, Iowa 50158 USA
Sorocaba, 18087 Brazil
Chatham, Kent ME4 4QZ UK
Dubai, United Arab Emirates
Singapore 128461 Singapore

www.Fisher.com

© 2008, 2012 Fisher Controls International LLC. All rights reserved.