Compact Performance

Safety Relief Valves
Series 437
Series 459

CATALOG

LESER

The-Safety-Valve.com

Valve Finder

LESER

Product group

High operating to set pressure ratio, high backpressure or low total height? — Yes → **High Efficiency**

No ↓

Clean Service application? — Yes → **Clean Service**

No ↓

Critical Service / highly corrosive application? — Yes → **Critical Service**

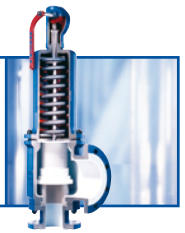

No ↓

API specified application? — Yes → **API**

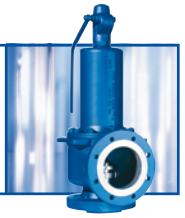

No ↓

Steam, gas and liquid application with low capacity in relation to valve size? — Yes → **Modulate Action**

No ↓

Required Orifice letter?

- Orifice ≥ F → **High Performance**

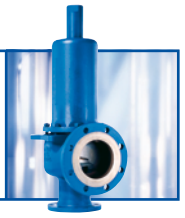

- Orifice ≤ F → **Compact Performance**

Additional components beyond safety valves — Yes → **Best Availability**

Medium-controlled

Spring loaded

Safety Relief Valves

Change-over valve

Bursting disc

Contents

Overview	Page
General	**2**
Valve finder	2
Applications, General design features	4

LESER Type	Page
Type 437, 438, 439	**7**
Type 437	
Materials	
• Available designs	8
• Available designs – materials	9
Article numbers	10
Dimensions and weights	
• Metric Units [Threaded connection]	11
• Metric Units [Flanged connection]	12
Pressure temperature ratings	
• Metric Units	13
Article numbers – Type 438	14
Article numbers – Type 439	15
Available options – Type 437, 438, 439	16

LESER Type	Page
Type 459, 459 HDD, 462, 462 HDD	**17**
Type 459	
Materials	
• Available designs	18
• Available designs – materials	19
Article numbers	20
Dimensions and weights	
• Metric Units [Threaded connection]	21
• Metric Units [Flanged connection]	22
Pressure temperature ratings	
• Metric Units	23
Article numbers – Type 459 HDD	24
Article numbers – Type 462	25
Article numbers – Type 462 HDD	26
Available options – Type 459, 459 HDD, 462, 462 HDD	27

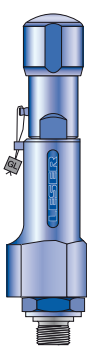

Type 437
Packed knob H4

Type 437
Packed knob H4
Long version

Type 437
Pull button H3

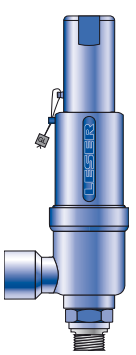

Type 459
Cap H2

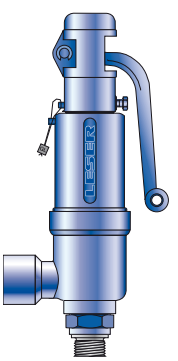

Type 459
Plain lever H3

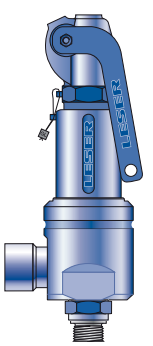

Type 459 HDD
Packed lever H4

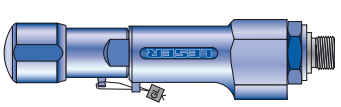

Type 437
Packed knob H4
Certified for horizontal fitting

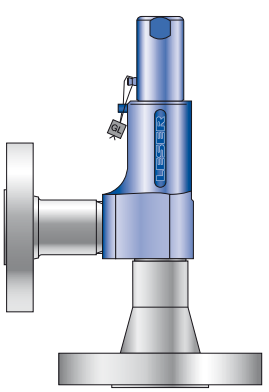

Type 437
Cap H2
Flange connection

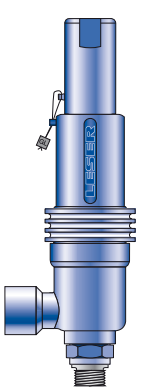

Type 459
Cap H2
Balanced bellows design

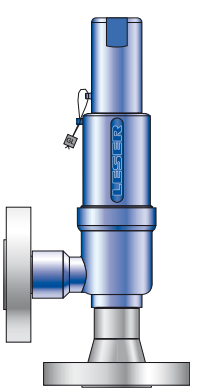

Type 459
Cap H2
Flange connection

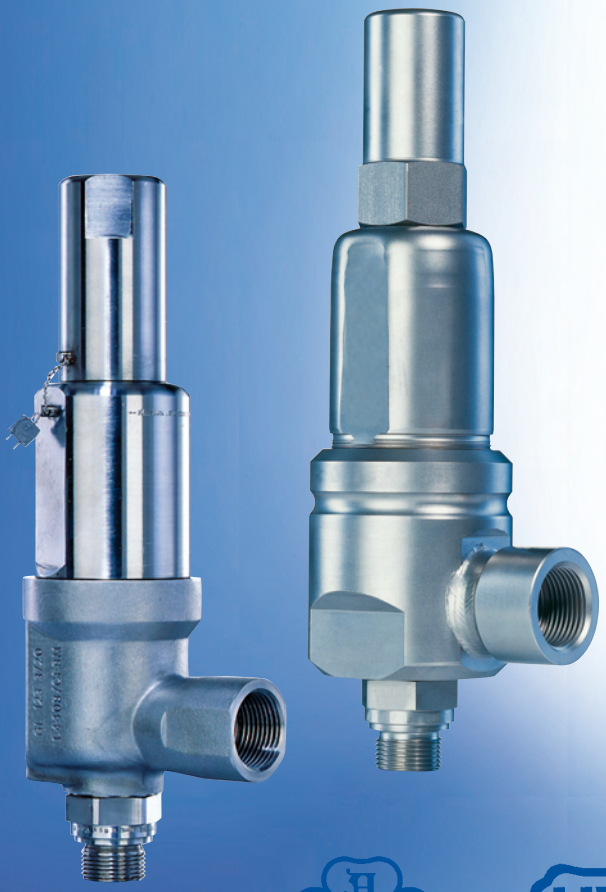

LESER – Compact Performance Safety Valves

This product group stands for

- ✓ Compact dimensions with high capacity relative to the safety valve size
- ✓ Great variety of threaded and flanged connections
- ✓ Wide pressure range

LESER´s Compact Performance Safety Valves

- Are designed to meet all industrial applications up to F orifice
- Open rapidly with an overpressure of max. 5 % (Series 459) resp. 10 % (Series 437) to the full design lift.
- Have a maximum blowdown of minus 10 % for steam / gas service and minus 20 % for liquid service.
- Are developed in a close cooperation with plant engineers and service specialists.
- Serve for protection of processes and equipment.
- Are approved by all important approval organisations worldwide which ensures the worldwide applicability e. g.:

  - European Community: CE-marking according to the Pressure Equipment Directive (PED) 97/23/EC and EN ISO 4126-1
  - USA: UV-stamp according to ASME Section VIII Division 1, National Board certified capacities
  - Germany: VdTÜV approval according to PED, EN ISO 4126-1, TÜV SV 100 and AD 2000-Merkblatt A2
  - Canada: Canadian Registration Number according to the requirements of particular provinces
  - China: AQSIQ based on the approval according to ASME Section VIII Division 1 and AD 2000-Merkblatt A2

Furthermore, all LESER Compact Performance Safety Valves are designed, marked, produced and approved according to the requirements of the following regulations (directives, codes, rules and standards).

EN ISO 4126-7, EN 12266-1 / -2, ISO 7-1 threads, ISO 228 threads, DIN EN 1092 Part I and II flanging ASME PTC 25, ASME-Code Sec. II, ASME B 16.34, ASME B1.20.1 threads and ASME B16.5 flanging, API Std. 527, API RP 576 AD 2000-Merkblatt A4, AD 2000-Merkblatt HP0, TRD 110, TRD 421, TRD 721

Applications

LESER – Compact Performance Safety Valves

offer ultimate protection against unallowable over-pressures in all applications for steam, gases and liquids where smaller capacities are required.

Typical applications for LESER Compact Performance Safety Valves are:

- Air / gas compressors and pumps
- Technical gases and CO_2 plants
- Cylinder filling stations
- Chemical equipment and piping
- Pressure vessels and piping systems containing gas, air, liquid or steam
- LPG / LNG terminals, carriers etc.
- Cryogenic systems and oxygen applications
- Thermal relief
- High pressure extraction plants

General Design Features

LESER´s Compact Performance Safety Valves

cover a large variety of types, materials and options to fit any application:

- Connection sizes from $^3/_8$" to 1 $^1/_2$" and 5 orifices (D through F) provide high suitability to the application
- Threaded connections, male and female, according to all international standards guarantee worldwide applicability
- Flanged connections according ANSI, DIN and JIS guarantee a worldwide applicability
- Inlet pressure ratings up to PN 700 / Class 2500 to fit all required design pressures
- 2 standard based / inlet body materials, Chrome steel and stainless steel as well as 3 standard body materials, ductile iron, steel and stainless steel can be selected according to the application
- All parts can be machined from bar materials to cover special material requirements such as Hastelloy®, Duplex, Super Duplex, Tantalum or Titanium within unrivalled lead time
- Set pressures from 0.1 to 850 bar / 1.5 to 12328 psig make Compact Performance safety valves suitable for all industrial processes
- Operating temperatures from -270 to 550 °C / -454 to 1022 °F (acc. to DIN EN) cover a wide range of applications
- One design and spring (single trim) for steam, gas and liquid applications reduces the number of spare parts and ensures low cost maintenance management
- Ringless design needs no trim adjustments for easy maintenance
- One-piece spindle reduces friction which leads to high operation accuracy
- Self-draining body design, avoids residues and reduces corrosion

LESER´s Compact Performance Safety Valves

can be customized with a great variety of options, e. g.:

- Special connections specified by the customer for optimised adaptation to the plant
- Stellited or hardened metal sealing for longer product life
- Soft seat solutions for superior tightness
- Stainless steel bellows for back pressure compensation
- Heating jackets for applications with high viscosity fluids
- Base / inlet body, body, bonnet and all internal parts can be produced in special materials exactly to meet customer specification requirements

Packed knob H4
Conventional design

Type 437 438 439

Packed knob H4
Flanged connection

Safety Relief Valves – spring loaded

Cap H2
Long version

Content **Page**

Type 437

Materials
- Available designs 8
- Available designs – materials 9

Article numbers 10

Dimensions and weights
- Metric Units [Threaded connection] 11
  [Flanged connection] 12

Pressure temperature ratings
- Metric Units 13

Article numbers
- Type 438 14
- Type 439 15

Type 437, 438, 439
- Available Options 16

Available designs

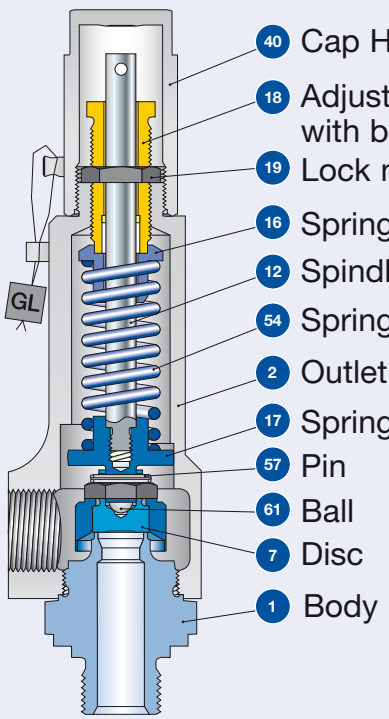

Conventional design
Threaded connection

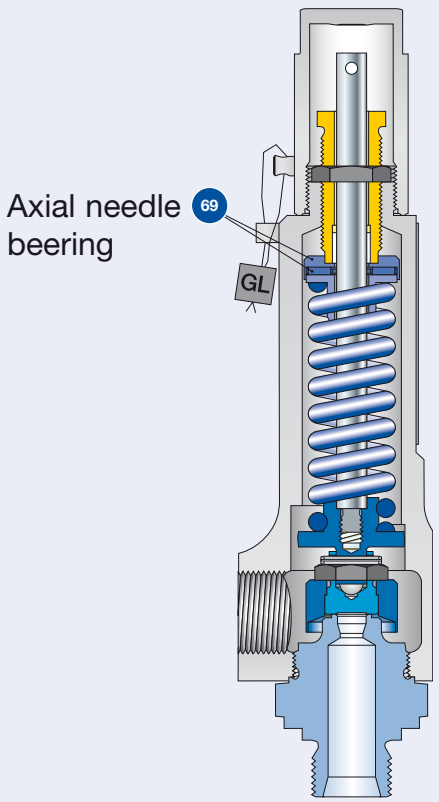

Long version
Threaded connection
only Type 437, 438

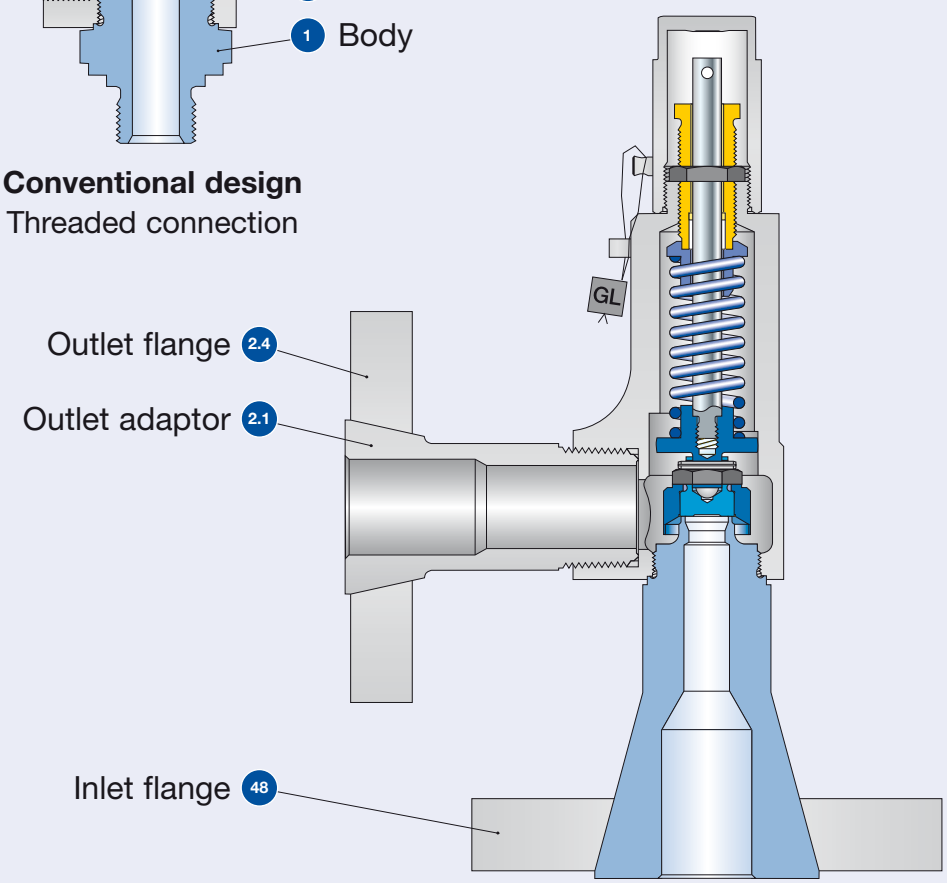

Conventional design
Flange connection

Available designs – materials

Materials

Item	Component	Remarks	Type 4373		Type 4374	
1	Base / Inlet body	Threaded connection	1.4104[1], 1.4404		1.4404	
			SA 479 430[1], SA 479 316L		SA 479 316L	
		Flange connection	1.4404		1.4404	
			SA 479 316L		SA 479 316L	
		Long version	1.4104[2], 1.4404 Stellited		1.4404 Stellited	
			SA 479 430[2], SA 479 316L Stellited		SA 479 316L Stellited	
2	Outlet body		1.4104		1.4404	
			SA 479 430		SA 479 316L	
2.1	Outlet adaptor	Flange connection	1.4404		1.4404	
			316L		316L	
2.4	Outlet flange	Flange connection	1.4404		1.4404	
			316L		316L	
7	Disc		1.4122		1.4404	
			Hardened stainless steel		SA 316L	
		Long version	d_0 6: 1.4404 Stellited	d_0 10: 1.4122	d_0 6: 1.4404 Stellited	d_0 10: 1.4404
			d_0 6: 316L Stellited	d_0 10: HSS	d_0 6: 316L Stellited	d_0 10: 316L
12	Spindle[3]		1.4021		1.4571	
			420		316Ti	
		Long version	1.4571		1.4571	
			316Ti		316Ti	
16/17	Spring plate[3]		1.4104		1.4404	
			Chrome steel		316L	
		Long version	1.4404		1.4404	
			316L		316L	
18	Adjusting screw with bushing		1.4104	PTFE	1.4404	PTFE
			Chrome steel	PTFE	316L	PTFE
19	Lock nut		1.0718		1.4404	
			Steel		316L	
40	Cap H2		1.0718		1.4404	
			Steel		316L	
48	Inlet flange	Flange connection	1.4404		1.4404	
			316L		316L	
54	Spring		1.4310		1.4310	
			Stainless steel		Stainless steel	
57	Pin		1.4310		1.4310	
			Stainless steel		Stainless steel	
61	Ball		1.3541		1.4401	
			Hardened stainless steel		316	
69	Axial needle beering	Long version	1.4404		1.4404	
			316L		316L	

[1] Only for male thread DIN ISO 228-1 G3/8, G1/2, G3/4 (Option Codes V49, V54, V55).
[2] Only for d_0 10 with male thread DIN ISO 228-1 G3/8, G1/2, G3/4 (Option Codes V49, V54, V55).
[3] The items 12 and 17 are combined to one unit.

Please notice:

- Modifications reserved by LESER.
- LESER can upgrade materials without notice.
- Every part can be replaced by other material acc. to customer specification.

Article numbers

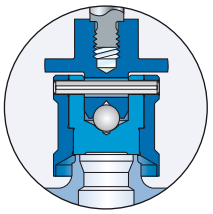

Metal seat

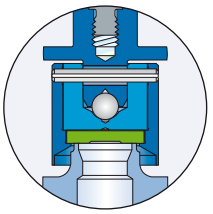

Disc with sealing plate

Article numbers

	Conventional design	Long version	
Actual Orifice diameter d_0 [mm]	10	6	10
Actual Orifice area A_0 [mm²]	78,5	28,3	78,5
Actual Orifice diameter d_0 [inch]	0,394	0,236	0,394
Actual Orifice area A_0 [inch²]	0,122	0,044	0,122
Base / Inlet body material: 1.4104 (430)			
H2 Art.-No. **4373.**	**2602**	**2622**	**2612**
H3 Art.-No. **4373.** $p_{max.}$ = 16 bar_g	**2603**	**–**	**–**
H4 Art.-No. **4373.**	**2604**	**2624**	**2614**
p [bar_g]	**S/G/L 0,1 – 93**	**S/G 180 – 365**	**S/G/L 93 –180**
p [psig]	**S/G/L 1,5 – 1349**	**S/G 2611 – 5294**	**S/G/L 1349 – 2611**
Base / Inlet body material: 1.4404 (316L)			
H2 Art.-No. **4374.**	**3142**	**3122**	**3152**
H4 Art.-No. **4374.**	**3144**	**3124**	**3154**
p [bar_g]	**S/G/L 0,1 – 68**	**S/G 180 – 330**	**S/G/L 68 –180**
p [psig]	**S/G/L 1,5 – 986**	**S/G 2611 – 4786**	**S/G/L 986 – 2611**

Dimensions and weights – Metric Units

Threaded connections

Size Outlet body	Conventional design			Long version					
	1/2"	3/4"	1"	1/2"	3/4"	1"	1/2"	3/4"	1"
Actual Orifice diameter d_0 [mm]	10	10	10	6	6	6	10	10	10
Actual Orifice area A_0 [mm²]	78,5	78,5	78,5	28,3	28,3	28,3	78,5	78,5	78,5
Weight [kg]	1,2	1,6	1,6	1,4	2,1	2,1	1,4	2,1	2,1
Required installation diameter [mm]	65	80	80	65	80	80	65	80	80

Inlet thread "Female"

		Size outlet body	Conventional design			Long version					
			1/2"	3/4"	1"	1/2"	3/4"	1"	1/2"	3/4"	1"
Center to face [mm]											
DIN ISO 228-1	**G**	Inlet 1/2" a	46	46	49	46	46	49	46	46	49
ISO 7-1/BS 21	**Rc**										
ASME B1.20.1	**NPT**	Inlet 3/4", 1" a	56	56	59	56	56	59	56	56	59
		Outlet b	30	37	37	30	37	37	30	37	37
Height [mm]											
		Inlet 1/2" H max.	209	209	212	230	230	233	230	230	233
		Inlet 3/4", 1" H max.	219	219	222	240	240	243	240	240	243

Inlet thread "Male"

		Size outlet body	Conventional design			Long version					
			1/2"	3/4"	1"	1/2"	3/4"	1"	1/2"	3/4"	1"
Center to face [mm]											
DIN ISO 228-1	**G**	Inlet a	33	33	36	33	33	36	33	33	36
		Outlet b	30	37	37	30	37	37	30	37	37
ISO 7-1/BS 21	**R**	Inlet a	31	31	34	31	31	34	31	31	34
ASME B1.20.1	**NPT**										
		Outlet b	30	37	37	30	37	37	30	37	37
Height [mm]											

		Size inlet thread	Conventional design				Long version			
			3/8"	1/2"	3/4"	1"	3/8"	1/2"	3/4"	1"
DIN ISO 228-1	**G**	H max.	208	210	212	217	229	231	233	238
ISO 7-1/BS 21	**R**	H max.	–	213	214	220	–	234	235	241
ASME B1.20.1	**NPT**	H max.	–	216	216	224	–	237	237	245

Length of screwed end "c" [mm]

		Size inlet thread	3/8"	1/2"	3/4"	1"
DIN ISO 228-1	**G**		12	14	16	18
ISO 7-1/BS 21	**R**		–	19	20	23
ASME B1.20.1	**NPT**		–	22	22	27

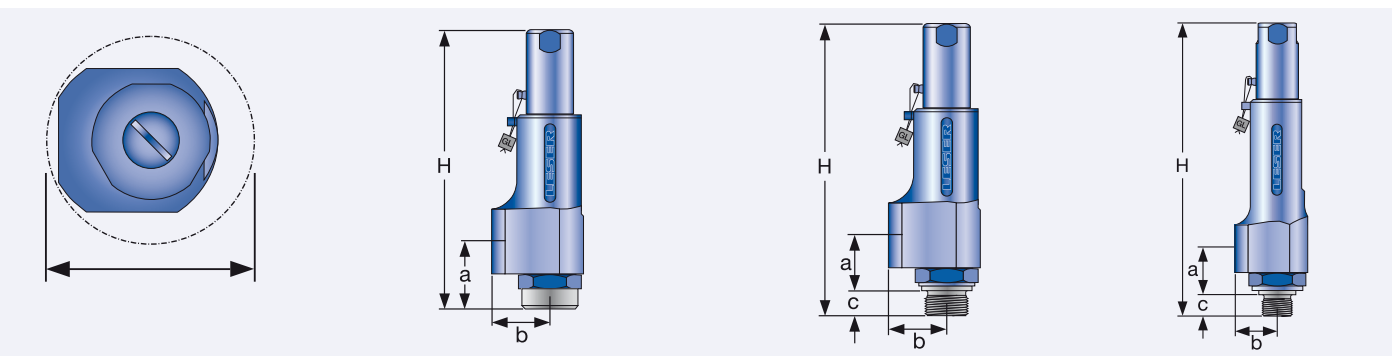

Required installation diameter | Conventional design – Female thread | Conventional design – Male thread | Long version – male thread

Dimensions and weights – Metric Units

Flanged connection

			Conventional design	Long version	
Actual Orifice diameter d_0 [mm]			10	6	10
Actual Orifice area A_0 [mm²]			78,5	28,3	78,5
DIN EN 1092-1					
				Flange rating class PN 40	
Center to face	[mm]	Inlet a	100	100	100
		Outlet b	100	100	100
Height	[mm]	H max.	263	284	284
				Flange rating class ≥ PN 160	
Center to face	[mm]	Inlet a	103	103	103
		Outlet b	100	100	100
Height	[mm]	H max.	266	287	287
ASME B 16.5					
				Flange rating class 150	
Center to face	[mm]	Inlet a	100	100	100
		Outlet b	100	100	100
Height	[mm]	H max.	263	284	284
				Flange rating class ≥ 300	
Center to face	[mm]	Inlet a	103	103	103
		Outlet b	100	100	100
Height	[mm]	H max.	266	287	287

Note The outlet dimension b can differ at special combinations of nominal diameter and pressure range if flanged connections are used at the inlet and outlet. Special dimensions are possible. More information at sales@leser.com

Weight

To calculate the total weight use the formula: $mT = m_N + m_F(\text{Inlet}) + m_F(\text{Outlet})$

Weight net (without inlet and outlet flange)	[kg]	m_N	2,4	2,8	2,8

Flange dimensions

			DIN EN 1092-1 / Flange rating PN						ASME B16.5 / Flange rating						
		Size	40	100	160	250	320	400	**Size**	150	300	600	900	1500	2500
DN 15									**NPS 1/2"**						
Flange thickness	[mm]	s	18	–	22	28	28	30		14	18	18	26	26	30,2
Weight slip on flange	[kg]	m_F	0,8	–	1,2	2,5	2,5	3,6		0,6	0,9	0,9	2,1	2,1	3
DN 20									**NPS 3/4"**						
Flange thickness	[mm]	s	20	22	–	–	–	–		15	18	18	25,4	25,4	32
Weight slip on flange	[kg]	m_F	1,1	1,3	–	–	–	–		0,8	1,4	1,4	2,3	2,3	3,5
DN 25									**NPS 1"**						
Flange thickness	[mm]	s	22	–	26	30	36	40		17	21,5	21,5	32,5	32,5	40
Weight slip on flange	[kg]	m_F	1,3	–	2,6	3,5	5	7,5		1	2,1	21	4,1	4,1	5,1

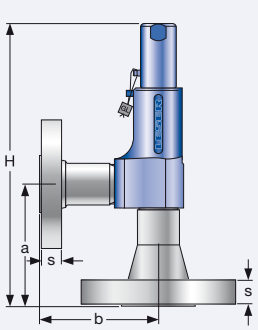

Conventional design

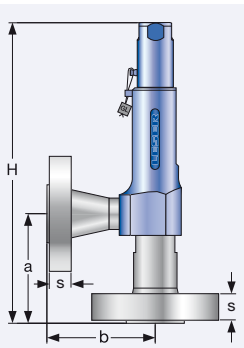

Long version

Pressure temperature ratings

Metric Units

	Actual Orifice diameter d_0 [mm]	6				10			
	Actual Orifice area A_0 [mm²]	28,3				78,5			
Body material: 1.4104 (430)									
Base / Inlet Body	Connection size	3/8"	1/2"	3/4"	1"	3/8"	1/2"	3/4"	1"
	Pressure rating	PN 400				PN 320			
Outlet body	Pressure rating	PN 160				PN 160			
Minimum set pressure	p [bar_g] S/G/L	180 [only S/G]				0,1			
Maximum set pressure	p [bar_g] S/G/L	365 [only S/G]				16 [only H3] 180			
Temperature acc. to DIN EN	min. [°C]	-10				-10			
	max. [°C]	+220				+220			
Temperature acc. to ASME	min. [°C]	-29				-29			
	max. [°C]	+220				+220			
Body material: 1.4404 (316L)									
Base / Inlet Body	Connection size	3/8"	1/2"	3/4"	1"	3/8"	1/2"	3/4"	1"
	Pressure rating	PN 400				PN 320			
Outlet body	Pressure rating	PN 160				PN 160			
Minimum set pressure	p [bar_g] S/G/L	180 [only S/G]				0,1			
Maximum set pressure	p [bar_g] S/G/L	365 [only S/G]				180			
Temperature acc. to DIN EN	min. [°C]	-270				-270			
	max. [°C]	+280				+280			
Temperature acc. to ASME	min. [°C]	-268				-268			
	max. [°C]	+280				+280			

Article numbers

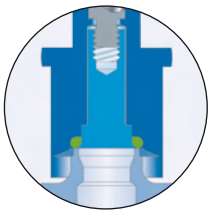

O-ring disc

Article numbers

	Conventional design	Long version
Actual Orifice diameter d_0 [mm]	10	10
Actual Orifice area A_0 [mm²]	78,5	78,5
Actual Orifice diameter d_0 [inch]	0,394	0394
Actual Orifice area A_0 [inch²]	0,122	0,122
O-ring material	NBR "N" J30	NBR "N" J30
	CR "K" J21	CR "K" J21
	EPDM "D" J22	EPDM "D" J22
	FKM "L" J23	FKM "L" J23
	FFKM "C" J20	FFKM "C" J20
Base / Inlet body material: 1.4104 (430)		
H2 Art.-No. **4383.**	**2862**	**2872**
H3 Art.-No. **4383.** p_{max} = 16 bar_g	**2863**	**–**
H4 Art.-No. **4383.**	**2864**	**2874**
p [bar_g] S/G/L	**5 – 93**	**93 – 180**
p [psig] S/G/L	**72,5 – 1349**	**1349 – 2611**
Base / Inlet body material: 1.4404 (316L)		
H2 Art.-No. **4384.**	**2982**	**2992**
H4 Art.-No. **4384.**	**2984**	**2994**
p [bar_g] S/G/L	**5 – 68**	**68 – 180**
p [psig] S/G/L	**72,5 – 986**	**986 – 2611**

Article numbers

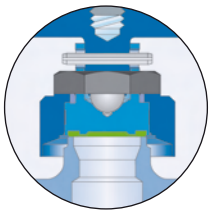

Vulcanized soft seat

Article numbers			
Actual Orifice diameter d_0 [mm]		10	
Actual Orifice area A_0 [mm²]		78,5	
Actual Orifice diameter d_0 [inch]		0,394	
Actual Orifice area A_0 [inch²]		0,122	
Soft seal material		NBR “N”	J30
		CR “K”	J21
		EPDM “D”	J22
		FKM “L”	J23
		FFKM “C”	J20
Base / Inlet body material: 1.4104 (430)			
H2	Art.-No. **4393.**	**2882**	
H3 p_{max} = 10 bar_g	Art.-No. **4393.**	**2883**	
H4	Art.-No. **4393.**	**2884**	
p [bar_g]	S/G/L	**0,1 – 16**	
p [psig]	S/G/L	**1,5 – 232**	
Base / Inlet body material: 1.4404 (316L)			
H2	Art.-No. **4394.**	**2892**	
H4	Art.-No. **4394.**	**2894**	
p [bar_g]	S/G/L	**0,1 – 16**	
p [psig]	S/G/L	**1,5 – 232**	

Available options

Male thread

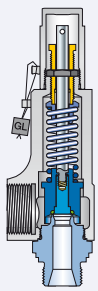

Type 437

Female thread

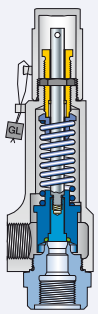

Type 437

Flanged version

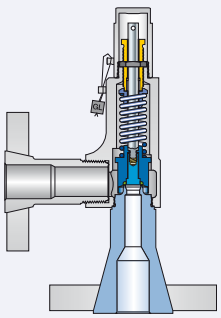

Type 438

Type 439

Stellited sealing surface
J25: Disc stellited
L20: Base/inlet body

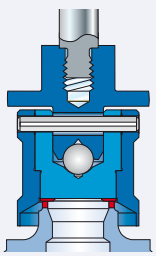

Disc with inserted sealing plate
J44: PTFE-FDA "A"
J48: PCTFE "G"
J49: VESPEL-SP1 "T"

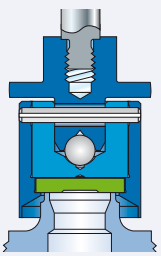

Soft seal o-ring disc
J30: NBR "N"
J21: CR "K"
J22: EPDM "D"
J23: FKM "L"
J20: FFKM "C"

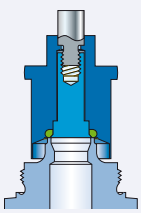

Vulcanized soft seal disc
J30: NBR "N"
J21: CR "K"
J22: EPDM "D"
J23: FKM "L"
J20: FFKM "C"

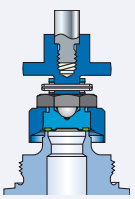

Heating jacket
H29

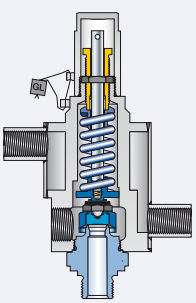

Test gag
J70: H2

INCONEL X-750 spring
X08

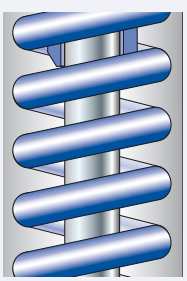

Special material
2.4610 Hastelloy® C4
2.4360 Monel® 400
1.4462 Duplex

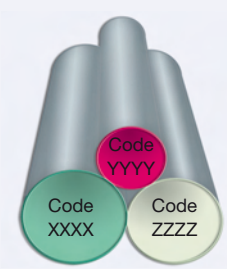

Plain lever H3

Cap H2

Type 459, 462 459 HDD 462 HDD

Safety Relief Valves – spring loaded

Contents **Page**

Type 459

Materials
- Available designs 18
- Available designs – materials 19

Article numbers

Dimensions and weights
- Metric Units [Threaded connection] 21
  [Flanged connection] 22

Pressure temperature ratings
- Metric Units 23

Article numbers
- Type 459 HDD 24
- Type 462 25
- Type 462 HDD 26

Type 459, 459 HDD, 462, 462 HDD
- Available options 27

Available designs

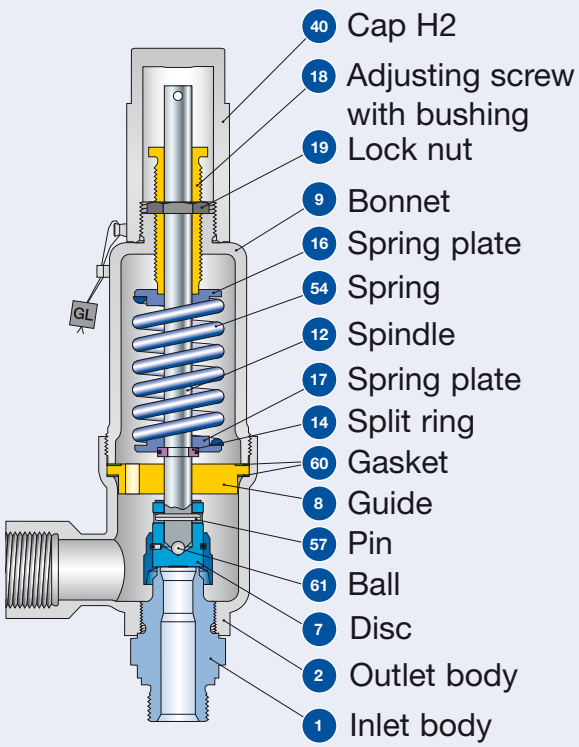

Conventional design
Threaded connection

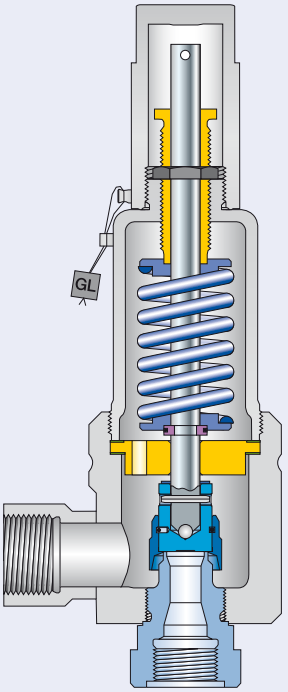

Conventional design
Threaded connection

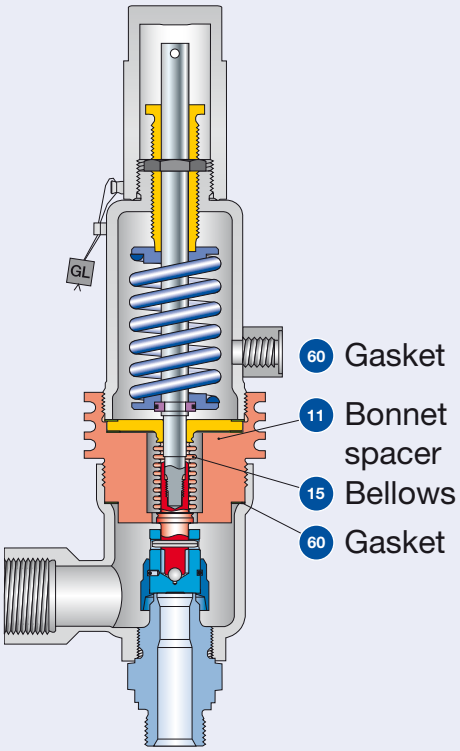

Balanced bellows
Threaded connection

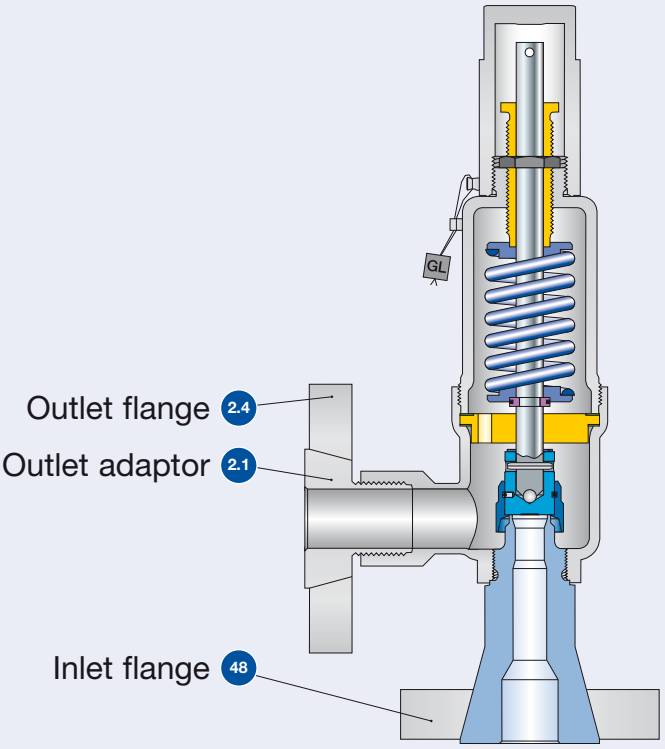

Conventional design
Flange connection

Available designs – materials

Materials

Item	Component	Remarks	Type 4593		Type 4592		Type 4594	
1	Base / Inlet body	Threaded connection	1.4104[2], 1.4404		1.4404		1.4404	
			SA 479 430[2], SA 479 316L		SA 479 316L		SA 479 316L	
		Flange connection	1.4404		1.4404		1.4404	
			SA 479 316L		SA 479 316L		SA 479 316L	
2	Outlet body		0.7043		1.0619		1.4408[1]	
			Ductile Gr. 60-40-18		WCB		CF8M[1]	
2.1	Outlet adaptor	Flange connection	1.4404		1.4404		1.4404	
			316L		316L		316L	
2.4	Outlet flange	Flange connection	1.4404		1.4404		1.4404	
			316L		316L		316L	
7	Disc	Metal seat	1.4122		1.4122		1.4404	
			Hardened stainless steel		Hardened stainless steel		316L	
8	Guide		1.4104 tenifer		1.4104 tenifer		1.4404	
			Chrome steel tenifer		Chrome steel tenifer		316L	
		Balanced bellows design	1.4404 / SA 316L		1.4404 / SA 316L		1.4404 / SA 316L	
			Upper conn. part of balanced bellows		Upper conn. part of balanced bellows		Upper conn. part of balanced bellows	
9	Bonnet		0.7043		1.0460		1.4404	
			Ductile Gr. 60-40-18		105		316L	
		Balanced bellows design	1.4404		1.4404		1.4404	
			316L		316L		316L	
11	Bonnet spacer	Balanced bellows design	1.0460		1.0460		1.4404	
			Carbon steel		Carbon steel		316L	
12	Spindle		1.4021		1.4404		1.4404	
			420		316L		316L	
		Balanced bellows design	1.4404		1.4404		1.4404	
			316L		316L		316L	
14	Split ring		1.4104		1.4104		1.4404	
			Chrome steel		Chrome steel		316L	
15	Bellows	Balanced bellows design	1.4571		1.4571		1.4571	
			SA 316Ti		316Ti		316Ti	
16/17	Spring plate		1.0718		1.0718		1.4404	
			Steel		Steel		316L	
18	Adjusting screw with bushung		1.4104	PTFE	1.4104	PTFE	1.4404	PTFE
			Chrome steel	PTFE	Chrome steel	PTFE	316L	PTFE
19	Lock nut		1.4104		1.4104		1.4404	
			Chrome steel		Chrome steel		316L	
40	Cap H2		1.0718		1.0718		1.4404	
			Steel		Steel		316L	
48	Inlet flange	Flange connection	1.4404		1.4404		1.4404	
			316L		316L		316L	
54	Spring	Standard	1.1200 / 1.8159 / 1.7107		1.1200 / 1.8159 / 1.7107		1.4310	
			Carbon steel		Carbon steel		Stainless steel	
		Optional	1.4310		1.4310		–	
			Stainless steel		Stainless steel		–	
57	Pin		1.4310		1.4310		1.4310	
			Stainless steel		Stainless steel		Stainless steel	
60	Gasket		Graphite	1.4401	Graphite	1.4401	Graphite	1.4401
			Graphite	316	Graphite	316	Graphite	316
61	Ball		1.3541		1.3541		1.4401	
			Hardened stainless steel		Hardened stainless steel		316	

Please notice:

- Modifications reserved by LESER.
- LESER can upgrade materials without notice.
- Every part can be replaced by other material acc. to customer specification.

[1] Type 4594 with outlet body deep-drawn: outlet body material 1.4404 / 316L
[2] only valid for male thread DIN ISO 228-1 G¾", G1", G1½" (Option codes V55, V56, V57) (please note availability regarding d_0)

Article numbers

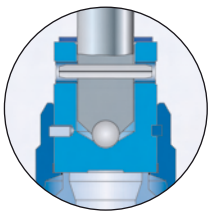

Metal seat

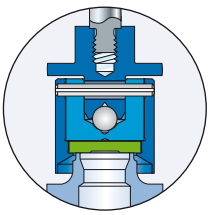

Disc with sealing plate

Article numbers						
	Actual Orifice diameter d_0 [mm]			9	13	17,5
	Actual Orifice area A_0 [mm²]			63,6	133	241
	Actual Orifice diameter d_0 [inch]			0,354	0,512	0,689
	Actual Orifice area A_0 [inch²]			0,099	0,206	0,374
Outlet body casted						
Inlet body	**1.4104**	**H2**	Art.-No. **4593.**	**2502**	**2512**	**2522**
Outlet body	**0.7043**	**H3**	Art.-No. **4593.**	**2503**	**2513**	**2523**
Bonnet	**0.7043**	**H4**	Art.-No. **4593.**	**2504**	**2514**	**2524**
	p [bar_g]		S/G/L	**1,5 – 250**	**0,2 – 200**	**0,2 – 100**
	p [psig]			**21,7 – 3626**	**2,9 – 2901**	**2,9 – 1450**
Outlet body investment casted						
Inlet body	**1.4404**	**H2**	Art.-No. **4592.**	**2472**	**2482**	**2492**
Outlet body	**1.0619 (WCB)**	**H3**	Art.-No. **4592.**	**2473**	**2483**	**2493**
Bonnet	**1.0460**	**H4**	Art.-No. **4592.**	**2474**	**2484**	**2494**
	p [bar_g]		S/G/L	**1,5 – 250**	**0,2 – 200**	**0,2 – 100**
	p [psig]			**21,7 – 3626**	**2,9 – 2901**	**2,9 – 1450**
Outlet body investment casted						
Inlet body	**1.4404**	**H2**	Art.-No. **4594.**	**2162**	**2172**	**2182**
Outlet body	**1.4408 (CF8M)**	**H4**	Art.-No. **4594.**	**2164**	**2174**	**2184**
Bonnet	**1.4404**					
	p [bar_g]		S/G/L	**1,5 – 250**	**0,2 – 200**	**0,2 – 100**
	p [psig]			**21,7 – 3626**	**2,9 – 2901**	**2,9 – 1450**
Outlet body deep-drawn						
All body and trim parts	**1.4404**	**H2**	Art.-No. **4594.**	**2552**	**2562**	**2572**
		H4	Art.-No. **4594.**	**2554**	**2564**	**2574**
	p [bar_g]		S/G/L	**1,5 – 250**	**0,2 – 200**	**0,2 – 100**
	p [psig]			**21,7 – 3626**	**2,9 – 2901**	**2,9 – 1450**

Dimensions and weights – Metric Units

Threaded connections

Size Outlet body		½" x 1"	¾" x 1"	1" x 1"	½" x 1"	¾" x 1"	1" x 1"	¾" x 1½"	1" x 1½"	1¼" x 1½"	1½" x 1½"
Actual Orifice diameter d_0 [mm]		9	9	9	13	13	13	17,5	17,5	17,5	17,5
Actual Orifice area A_0 [mm²]		63,6	63,6	63,6	133	133	133	241	241	241	241
Weight	[kg]	2,6	2,6	2,6	2,6	2,6	2,6	3,0	3,0	3,0	3,0
Balanced bellows	[kg]	3,4	3,4	3,4	3,4	3,4	3,4	3,8	3,8	3,8	3,8
Required installation diameter	[mm]	165	165	165	165	165	165	165	165	165	165

Inlet thread "Female"

Size outlet body		½" x 1"	¾" x 1"	1" x 1"	½" x 1"	¾" x 1"	1" x 1"	¾" x 1½"	1" x 1½"	1¼" x 1½"	1½" x 1½"
Actual Orifice diameter d_0 [mm]		9	9	9	13	13	13	17,5	17,5	17,5	17,5
Center to face / Height											
DIN ISO 228-1 G **ASME B1.20.1 NPT**	Inlet a	53	56	62	53	56	62	60	66	67	73
Center to face [mm]	Outlet b	75	75	75	75	75	75	75	75	75	75
Height [mm]	H max	283	286	292	283	286	292	287	293	294	300
Balanced bellows	H max	315	318	324	315	318	324	319	325	326	332
ISO 7-1/BS 21 Rc	Inlet a	53	56	64	53	56	64	60	68	–	77
Center to face [mm]	Outlet b	75	75	75	75	75	75	75	75	–	75
Height [mm]	H max	283	286	294	283	286	294	287	295	–	304
Balanced bellows	H max	315	318	326	315	318	326	319	327	–	336

Inlet thread "Male"

Size outlet body		1"	1"	1½"
Actual Orifice diameter d_0 [mm]		9	13	17,5
Center to face [mm]				
DIN ISO 228-1 G	Inlet ½" – 1" a	52	–	–
	Inlet 1"– 2" a	–	–	56
	Outlet b	75	75	75
ISO 7-1/BS 21 R	Inlet ½" – 1" a	49	49	–
ASME B1.20.1 NPT	Inlet 1" – 2" a	–	–	53
	Outlet b	75	75	75

Height [mm]

			Conventional design						Balanced bellows					
		Size inlet thread	½"	¾"	1"	1¼"	1½"	2"	½"	¾"	1"	1¼"	1½"	2"
DIN ISO 228-1	**G**	H max.	296	298	301	303	305	–	328	330	333	335	337	–
ISO 7-1/BS 21	**R**	H max.	298	299	303	–	305	–	330	331	335	–	337	–
ASME B1.20.1	**NPT**	H max.	301	301	307	308	308	309	333	333	339	340	340	341

Length of screwed end "c" [mm]

		Size inlet thread	½"	¾"	1"	1¼"	1½"	2"
DIN ISO 228-1	**G**		14	16	18	20	22	–
ISO 7-1/BS 21	**R**		19	20	23	–	25	–
ASME B1.20.1	**NPT**		22	22	27	28	28	29

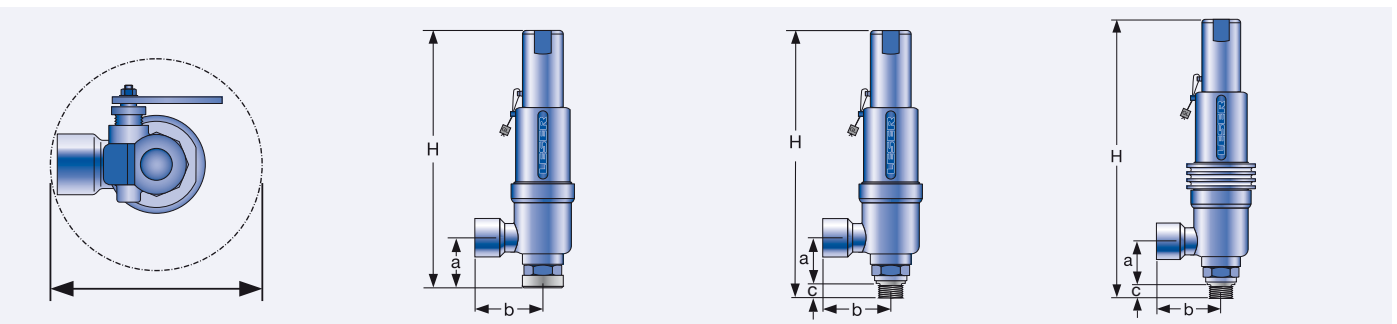

Required installation diameter | Conventional design – Female thread | Conventional design – Male thread | Balanced bellows

Dimensions and weights – Metric Units

Flanged connection

			Conventional design			Balanced bellows		
Actual Orifice diameter d_0 [mm]			9	13	17.5	9	13	17.5
Actual Orifice area A_0 [mm²]			63,6	133	241	63,6	133	241
DIN EN 1092-1								
			Flange rating PN 40 – PN 400					
Center to face	[mm]	Inlet a	100	100	105	100	100	105
		Outlet b	100	100	100	100	100	100
Height	[mm]	H max.	330	330	333	375	375	378
ASME B 16.5								
			Flange rating class 150 – 2500					
Center to face	[mm]	Inlet a	100	103	105	100	100	105
		Outlet b	100	100	100	100	100	100
Height	[mm]	H max.	330	330	333	375	375	378

Note The outlet dimension b can differ at special combinations of nominal diameter and pressure range if flanged connections are used at the inlet and outlet. Special dimensions are possible. More information at sales@leser.com.

Weight

For the calculation of the total weight please use the Formular: $W_T = W_N + W_F$ (Inlet) + W_F (Outlet)

Weight net (without inlet and outlet flange)	[kg]	m_N	2,6	2,3	3	3,8	3,8	4,2

Flange dimensions

			DIN EN 1092-1 / Flange rating PN						ASME B16.5 / Flange rating						
		Size	40	100	160	250	320	400	**Size**	150	300	600	900	1500	2500
DN 15									**NPS 1/2"**						
Flange thickness	[mm]	s	18	–	22	28	28	30		14	18	18	26	26	30,2
Weight slip on flange	[kg]	m_F	0,8	–	1,2	2,5	2,5	3,6		0,6	0,9	0,9	2,1	2,1	3
DN 20									**NPS 3/4"**						
Flange thickness	[mm]	s	20	22	–	–	–	–		15	18	18	25,4	25,4	32
Weight slip on flange	[kg]	m_F	1,1	1,3	–	–	–	–		0,8	1,4	1,4	2,3	2,3	3,5
DN 25									**NPS 1"**						
Flange thickness	[mm]	s	22	–	26	30	36	40		17	21,5	21,5	32,5	32,5	40
Weight slip on flange	[kg]	m_F	1,3	–	2,6	3,5	5	7,5		1	2,1	2,1	4,1	4,1	5,1
DN 40									**NPS 1 1/2"**						
Flange thickness	[mm]	s	21	–	23	32	–	–		22	24	24	32	–	–
Weight slip on flange	[kg]	m_F	2,1	–	2,9	4,3	–	–		1,4	2,2	2,2	3,9	–	–

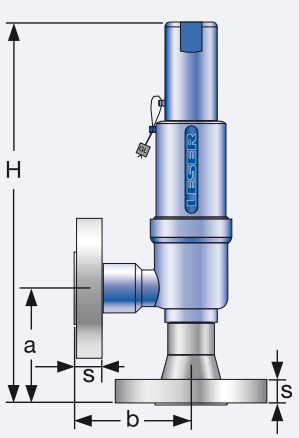

Conventional design

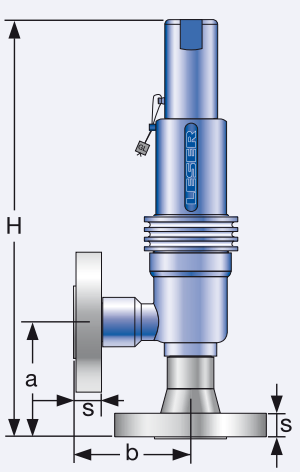

Balanced bellows

Pressure temperature ratings – Metric Units

Metric Units												
	Actual Orifice diameter d_0 [mm]	9			13			17,5				
	Actual Orifice Area A_0 [mm²]	63,6			133			241				
Body material: 1.4104 (430)					**Type 4593**							
Base / Inlet Body	Connection size	1/2"	3/4"	1"	1/2"	3/4"	1"	3/4"	1"	1 1/4"	1 1/2"	2"
	Pressure rating	PN 400			PN 250			PN 160				
Outlet body	Pressure rating	PN 40			PN 40			PN 40				
Minimum set pressure	p [bar_g] S/G/L	1,5			0,2			0,2				
Min. set pressure standard bellows	p [bar_g] S/G/L	3			3			3				
Min. set pressure[1] high press. bellows	p [bar_g] S/G/L	40			40			40				
Maximum set pressure	p [bar_g] S/G/L	250			200			100				
Temperature acc. to DIN EN	min [°C]	-10										
	max [°C]	+300										
Temperature acc. to ASME	min [°C]	-29										
	max [°C]	+300										
Body material: 1.4404 (316L)					**Type 4592**							
Base / Inlet Body	Connection size	1/2"	3/4"	1"	1/2"	3/4"	1"	3/4"	1"	1 1/4"	1 1/2"	2"
	Pressure rating	PN 250 PN 500 (Option code L20)			PN 160 PN 250 (Option code L20)			PN 160				
Outlet body	Pressure rating	PN 40			PN 40			PN 40				
Minimum set pressure	p [bar_g] S/G/L	1,5			0,2			0,2				
Min. set pressure standard bellows	p [bar_g] S/G/L	3			3			3				
Min. set pressure[1] high press. bellows	p [bar_g] S/G/L	40			40			40				
Maximum set pressure	p [bar_g] S/G/L	250			200			100				
Temperature acc. to DIN EN	min [°C]	-85										
	max [°C]	+400										
Temperature acc. to ASME	min [°C]	-29										
	max [°C]	+427										
Body material: 1.4404 (316L)					**Type 4594**							
Base / Inlet Body	Connection size	1/2"	3/4"	1"	1/2"	3/4"	1"	3/4"	1"	1 1/4"	1 1/2"	2"
	Pressure rating	PN 250 PN 500 (Option code L20)			PN 160 PN 500 (Option code L20)			PN 160				
Outlet body	Pressure rating	PN 40			PN 40			PN 40				
Minimum set pressure	p [bar_g] S/G/L	1,5			0,2			0,2				
Min. set pressure standard bellows	p [bar_g] S/G/L	3			3			3				
Min. set pressure[1] high press. bellows	p [bar_g] S/G/L	40			40			40				
Maximum set pressure	p [bar_g] S/G/L	250			200			100				
Temperature acc. to DIN EN	min [°C]	-200										
	max [°C]	+400										
Temperature acc. to ASME	min [°C]	-184										
	max [°C]	+427										

[1] Min. set pressure high pressure bellows = Max. pressure standard bellows.
Because there is no open bonnet for this type available, please use at a temperature of 300 °C (572 °F) refer to SAP a stainless steel bellows or a specific high temperature model without a bellows. For DIN EN applications at temperatures under -10°C please proceed according to AD-2000 Merkblatt W 10.

Article numbers

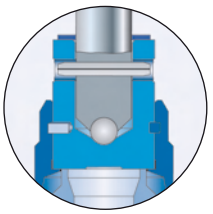

Metal seat

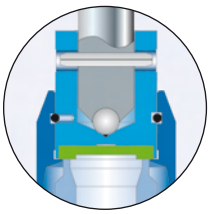

Disc with sealing plate

Article numbers						
			Actual Orifice diameter d_0 [mm]	6[1)]	9	13
			Actual Orifice area A_0 [mm²]	28,3	63,9	133
			Actual Orifice diameter d_0 [inch]	0,236	0,354	0,512
			Actual Orifice area A_0 [inch²]	0,044	0,099	0,206
Body material: 14404 (316L)						
All body and trim parts	**1.4404**	**H2**	Art.-No. **4594.**	**2532**	**2582**	**2592**
		H4	Art.-No. **4594.**	**2534**	**2584**	**2594**
	p [bar_g]		S/G/L	**420,01 – 850**	**1,5 – 420**	**0.2 – 200**
	p [psig]			**6091 – 12328**	**21,7 – 6091**	**2.9 – 2901**

[1)] The specification of the medium is necessary at liquid applications (Option Code M09).

Article numbers

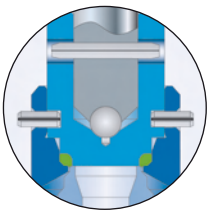

O-ring disc

Article numbers						
			Actual Orifice diameter d_0 [mm]	9	13	17,5
			Actual Orifice area A_0 [mm²]	63,6	133	241
			Actual Orifice diameter d_0 [inch]	0,354	0,512	0,689
			Actual Orifice area A_0 [inch²]	0,099	0,206	0,374
O-ring material					NBR "N" J30	
					CR "K" J21	
					EPDM "D" J22	
					FKM "L" J23	
					FFKM "C" J20	
Outlet body casted						
Inlet body	**1.4104**	**H2**	Art.-No. **4623.**	**2902**	**2912**	**2922**
Outlet body	**0.7043**	**H3**	Art.-No. **4623.**	**2903**	**2913**	**2923**
Bonnet	**0.7043**	**H4**	Art.-No. **4623.**	**2904**	**2914**	**2924**
	p [bar_g]		S/G/L	**0,5 – 250**	**0,5 – 180**	**0,5 – 92,5**
	p [psig]			**7,3 – 3626**	**7,3 – 2611**	**7,3 – 1342**
Outlet body investment casted						
Inlet body	**1.4404**	**H2**	Art.-No. **4622.**	**3772**	**3782**	**3792**
Outlet body	**1.0619 (WCB)**	**H3**	Art.-No. **4622.**	**3773**	**3783**	**3793**
Bonnet	**1.0460**	**H4**	Art.-No. **4622.**	**3774**	**3784**	**3794**
	p [bar_g]		S/G/L	**0,5 – 250**	**0,5 – 180**	**0,5 – 92,5**
	p [psig]			**7,3 – 3626**	**7,3 – 2611**	**7,3 – 1342**
Outlet body investment casted						
Inlet body	**1.4404**					
Outlet body	**1.4408 (CF8M)**	**H2**	Art.-No. **4624.**	**2192**	**2202**	**2212**
Bonnet	**1.4404**	**H4**	Art.-No. **4624.**	**2194**	**2204**	**2214**
	p [bar_g]		S/G/L	**0,5 – 250**	**0,5 – 180**	**0,5 – 92,5**
	p [psig]			**7,3 – 3626**	**7,3 – 2611**	**7,3 – 1342**
Outlet body deep-drawn						
All body and trim parts		**H2**	Art.-No. **4624.**	**2952**	**2962**	**2972**
	1.4404	**H4**	Art.-No. **4624.**	**2954**	**2964**	**2974**
	p [bar_g]		S/G/L	**0,5 – 250**	**0,5 – 180**	**0,5 – 92,5**
	p [psig]			**7,3 – 3626**	**7,3 – 2611**	**7,3 – 1342**

Article numbers

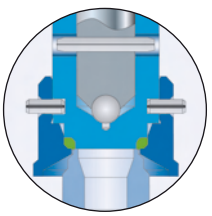

O-ring disc

Article numbers						
Actual Orifice diameter d_0 [mm]				9		13
Actual Orifice area A_0 [mm²]				63,6		133
Actual Orifice diameter d_0 [inch]				0,354		0,512
Actual Orifice area A_0 [inch²]				0,099		0,206
O-ring material				NBR	"N" J30	
				CR	"K" J21	
				EPDM	"D" J22	
				FKM	"L" J23	
				FFKM	"C" J20	
Body material: 1.4404 (316L)						
All body and trim parts	**1.4404**	**H2**	Art.-No. **4624.**	**2252**		**2272**
		H4	Art.-No. **4624.**	**2254**		**2274**
	p [bar_g]		S/G/L	**0,5 – 350**		**0,5 – 180**
	p [psig]			**7,3 – 5076**		**7,3 – 2611**

Available Options

Male thread

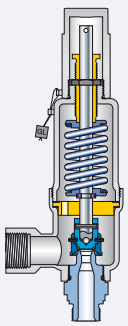

Female thread

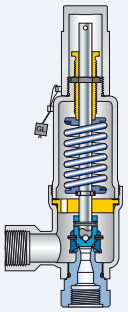

Flanged version

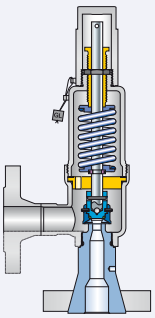

Solar valve
N80

4592.2482
4592.2484

Type 459

Stellited sealing surface
J25: Disc stellited
L20: Base/inlet body

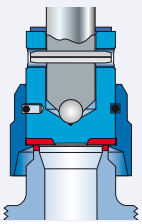

Type 459

Disc with inserted sealing plate
J44: PTFE-FDA "N"
J48: PCTFE "D"
J49: VESPEL-SP "K"

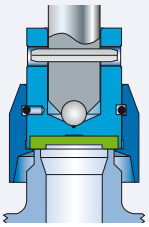

Type 462

Soft seal o-ring disc
J30: NBR "N"
J21: CR "K"
J22: EPDM "D"
J23: FKM "L"
J20: FFKM "C"

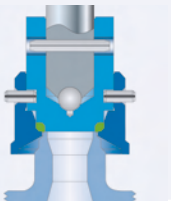

Heating jacket
H29

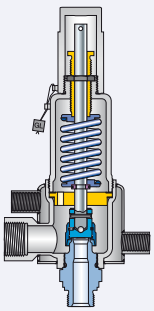

Balanced bellows

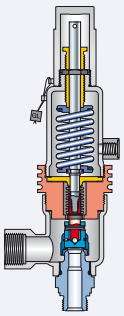

INCONEL X-750 spring
X08

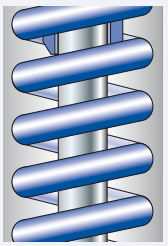

Special material
2.4610 Hastelloy® C4
2.4360 Monel® 400
1.4462 Duplex

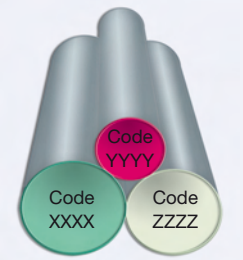

Lift indicator
J93: Lift indicator

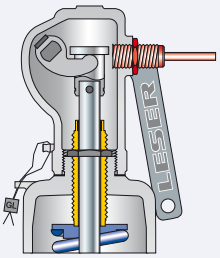

Test gag
J69: H4
J70: H2

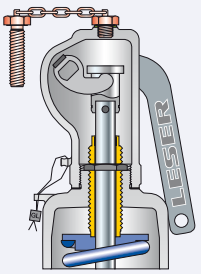

O-ring-damper H2
J65

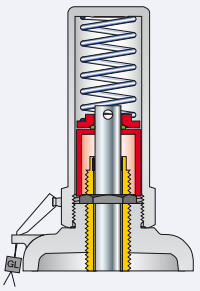

O-ring-damper H4
J66

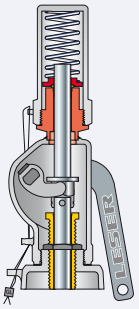

LESER worldwide

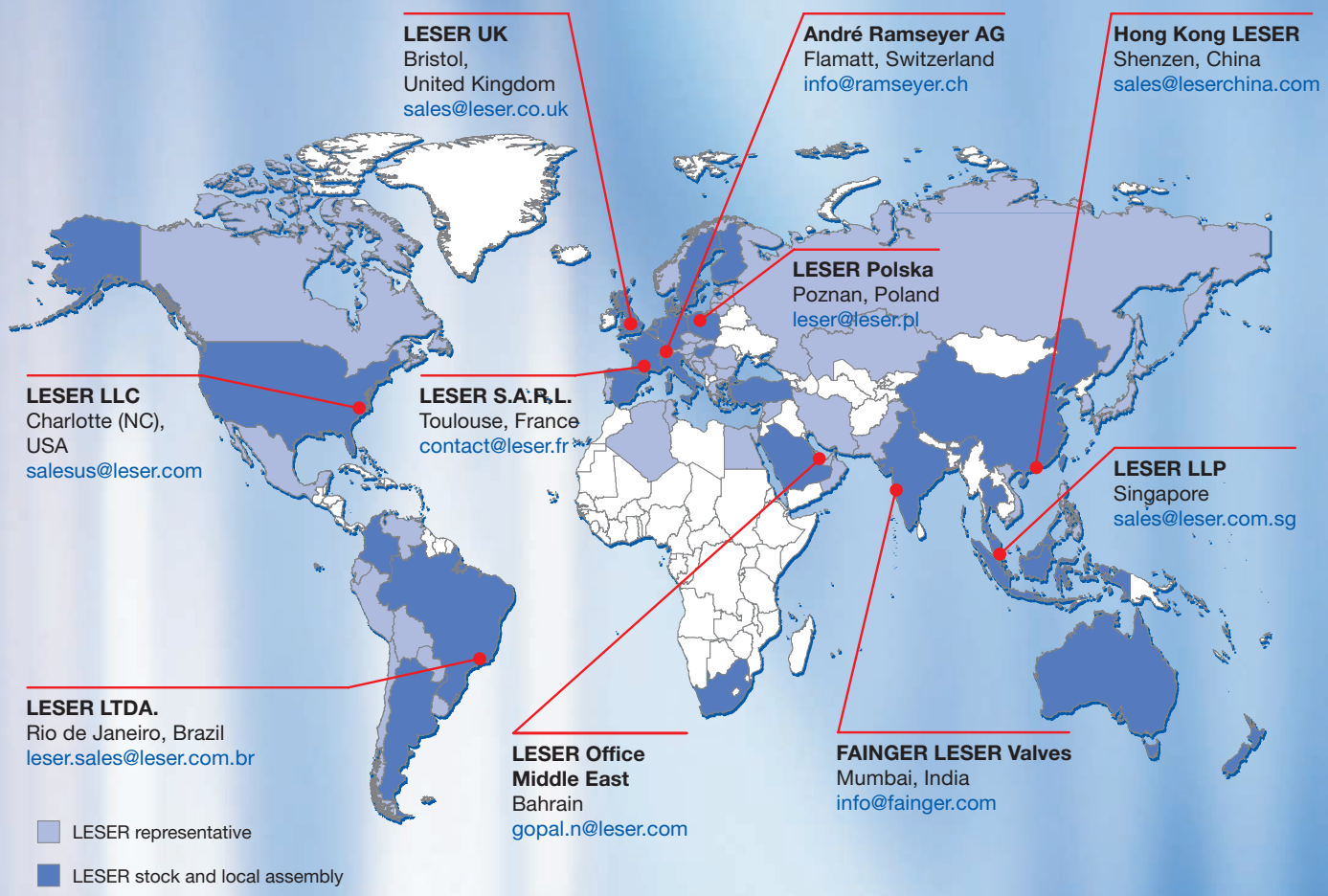

Compact Performance Catalog
Edition July 2012/1.000
0777.5681

LESER

The-Safety-Valve.com

LESER GmbH & Co. KG
20537 Hamburg, Wendenstr. 133-135
20506 Hamburg, P.O. Box 26 16 51
Fon +49 (40) 251 65-100
Fax +49 (40) 251 65-500
E-Mail: sales@leser.com
www.leser.com