WESTLOCK CONTROLS

Agency Approvals:
Type 4, 4X Enclosures (NEMA 4, 4X)

Product Overview

AccuTrak™ Rotary Position Monitors with mechanical switches.

1040 – Engineered Resin Enclosure

2004 – Aluminum Enclosure with powder coat finish

Features and Benefits

- The Westlock™ Beacon is manufactured from a high impact strength and corrosion resistant co-polyester that offers 360 degree instant visual recognition of valve position from up to 150 feet away.
- Touch set cams are hand adjustable, spring loaded and self-locking providing quick calibration of position sensors.
- Terminal strips are pre-wired and numbered with generous working space for ease of use.
- All units are standard with an additional conduit for easy field wiring and mounting accessories.
- All AccuTrak™ and Quantum products utilize a standardized mounting pattern for easy adaptation to common bracketry.
- Low copper content aluminum enclosures (0.2% maximum copper content) helps ensure robust performance in corrosive environments.
- Captive screws on cover prevent lost screws during installation and maintenance.
- NAMUR shaft output compliant to VDI/VDE 3845 available.
- Premium engineered resin helps allow the broadest operating temperature range in the industry, extreme chemical resistance and superior durability.

tyco Flow Control

Westlock is either a trademark or registered trademark of Tyco International Services AG or its affiliates in the United States and/or other countries. All other brand names, product names, or trademarks belong to their respective holders.

Copyright © 2009 Tyco Flow Control. All rights reserved.

Dimensions Model 1040

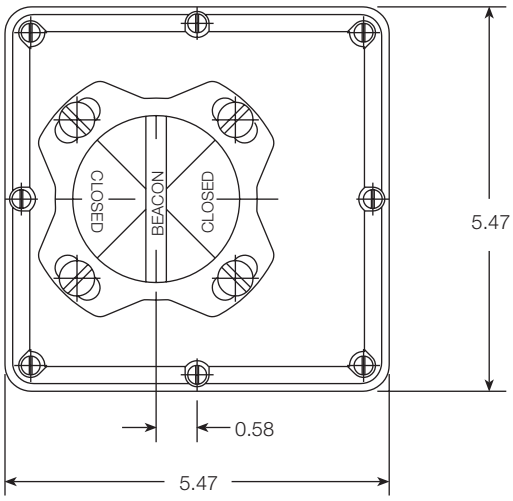

Top View

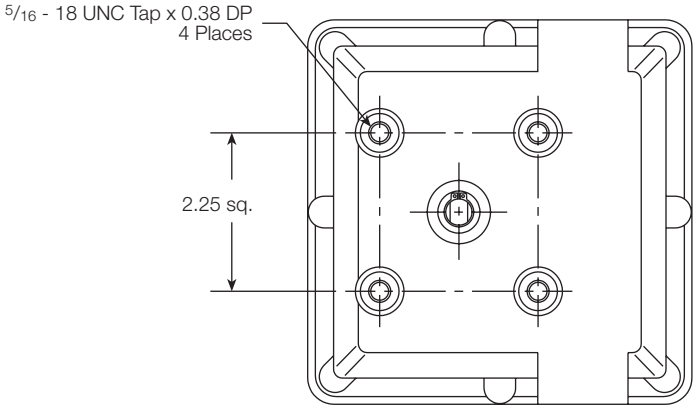

Bottom View

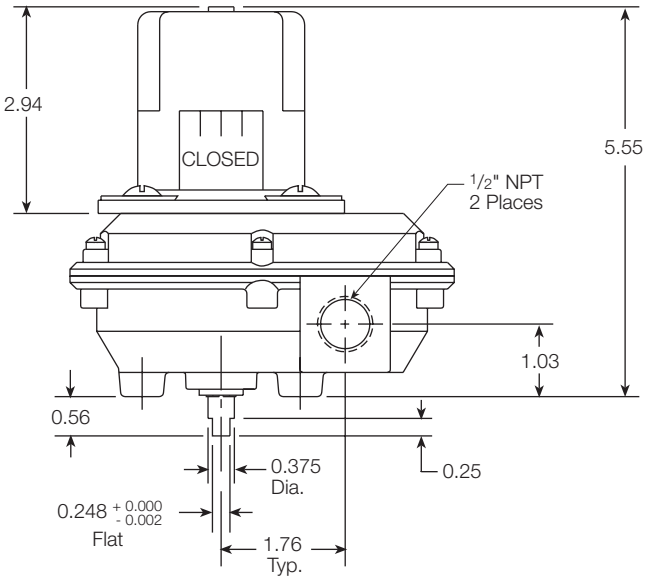

Side View

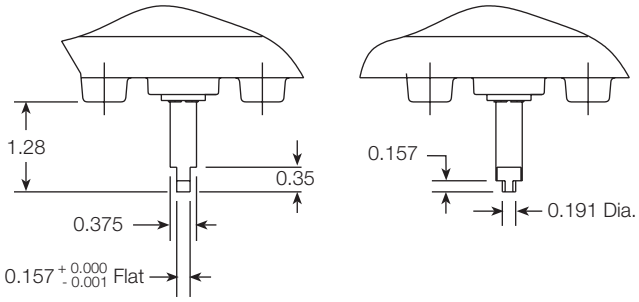

Optional NAMUR Shaft

Technical Specifications

Materials of Construction

Enclosure Model 1040: Glass filled nylon resin
Model 2004: Aluminum with polyester powder coat

Shaft and hardware: Stainless steel

Internal threaded inserts (Model 1040 only): Brass

Beacon visual indicator: Co-polyester

Bushing Model 1040: Nylon
Model 2004: Oil impregnated bronze

Available Switches

- V3 mechanical switches, SPDT
- DPDT (Form CC) mechanical switches

For switch electrical ratings see reference section

Copyright © 2009 Tyco Flow Control. All rights reserved.

Dimensions Model 2004

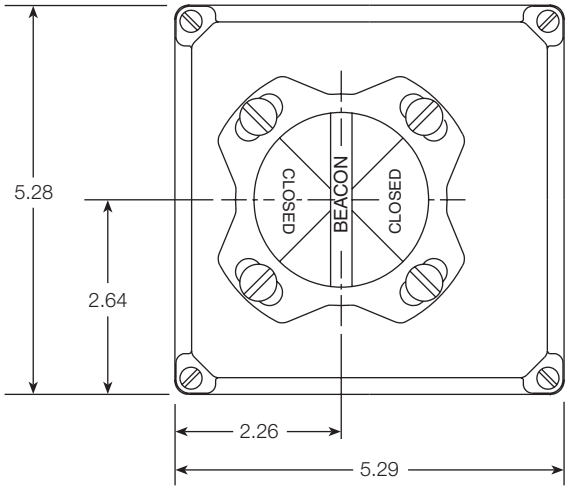

Top View

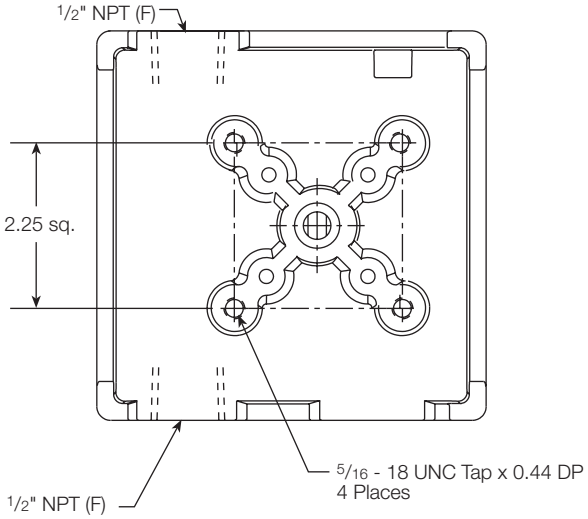

Bottom View

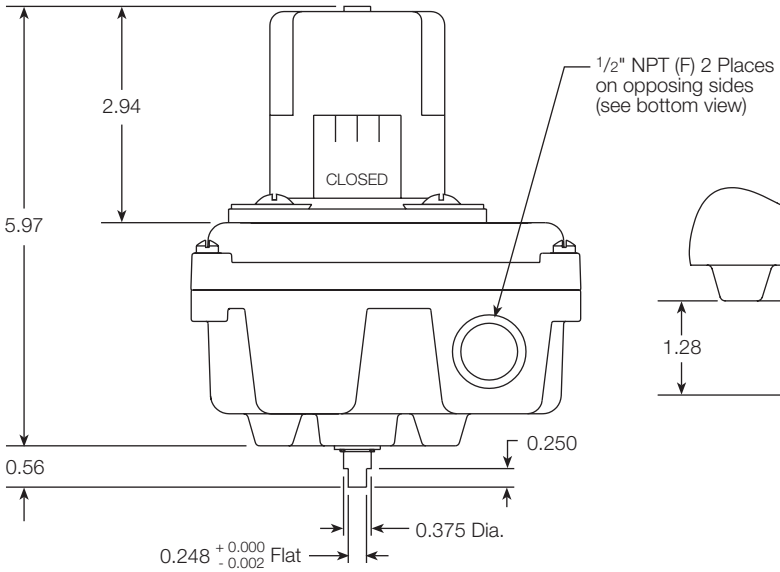

Side View

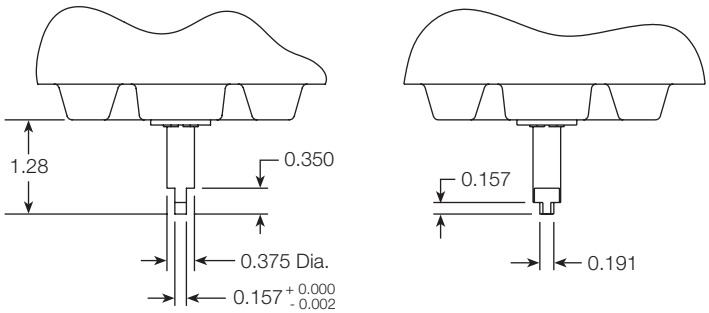

Optional NAMUR Shaft

Copyright © 2009 Tyco Flow Control. All rights reserved.

Ordering Guide (Quick ship options are in bold)

Base Model

1040	**Engineered Resin Enclosure**
2004	**Aluminum Enclosure**

Shaft Output

S	Standard (Double-D with 1/4" Flats)
N	**NAMUR**
D	Direct Mount (Modmount system included for Keystone MRP and 79U actuators)

Beacon

BY	**BM2-Y (Standard)**
RG	BM2-RG
FE	BM2-Y-FE (French/English)
AB	BM2-B
AR	BM2-R
B1	BM3-1
B3	BM3-3
B5	BM3-5
B7	BM3-7
B9	BM3-9
FC	Flat Cover

Conduit

2A	**Two 1/2" NPT (F)**

Position Switches

2M02	**Two SPDT Mechanical Switches - 8 pt. TS**
2M04	Two DPDT Mechanical Switches - 16 pt. TS (not available in Model 1040)

Analog Position Transmitter

00	**None**
CS	4-20 mA Position Transmitter - 12 pt. TS w/2 SPDT option and 16 pt. TS w/2 DPDT option (not available in Model 1040)

2004	N	BY	2A	2M02	00	=	Model Number **2004NBY2A2M0200**

USA/Canada: Saddle Brook, NJ
Ph: 201-794-7650
Dedicated Order Fax: 201-794-4790
General Fax: 201-794-0913
www.westlockcontrols.com

Europe/Asia: Kent, England
Ph: + 44 189 251 6277
Fax: + 44 189 251 6279
www.westlockuk.com

South America: Barueri, Sao Paulo
Ph: + 55 11 2588 1400
Fax: + 55 11 2588 1410
www.westlock.com.br

Tyco Flow Control (TFC) provides the information herein in good faith but makes no representation as to its comprehensiveness or accuracy. This data sheet is intended only as a guide to TFC products and services. Individuals using this data sheet must exercise their independent judgment in evaluating product selection and determining product appropriateness for their particular purpose and system requirements. TFC MAKES NO REPRESENTATIONS OR WARRANTIES, EITHER EXPRESS OR IMPLIED, INCLUDING WITHOUT LIMITATION ANY WARRANTIES OF MERCHANTABILITY OR FITNESS FOR A PARTICULAR PURPOSE WITH RESPECT TO THE INFORMATION SET FORTH HEREIN OR THE PRODUCT(S) TO WHICH THE INFORMATION REFERS. ACCORDINGLY, TFC WILL NOT BE RESPONSIBLE FOR DAMAGES (OF ANY KIND OR NATURE, INCLUDING INCIDENTAL, DIRECT, INDIRECT, OR CONSEQUENTIAL DAMAGES) RESULTING FROM THE USE OF OR RELIANCE UPON THIS INFORMATION. Patents and Patents Pending in the U.S. and foreign countries. Tyco reserves the right to change product designs and specifications without notice. All registered trademarks are the property of their respective owners. Printed in the USA.

Copyright © 2009 Tyco Flow Control. All rights reserved.