KEYSTONE

K-LOK® Installation, Operation, Maintenance and Troubleshooting

General

Suggested installation orientation is with valve shaft horizontal or inclined from vertical. Unless otherwise recommended by Tyco Flow Control, mount the valve in the preferred direction with the directional arrow pointing to the lower pressure side so that the front face of the disc will be upstream when the valve is in the closed position.

Thermal insulation of the body is mandatory for operating temperatures above 392°F [200°C].

K-LOK offers the following body styles:
Series 36 and 37 – Wafer Style
Series 36 and 37 – Lug Style

Inspection

1. Carefully remove the valve from the shipping package (box or pallet) to avoid any damage to the valve and, in the case of automated valves, to the electric or pneumatic/hydraulic actuator or instrumentation.
2. Prior to installation, clean the inside of the valve. Insure that there are no solid objects such as pieces of wood, plastic or packing materials within the valve or on the valve seat.
3. Inspect the seat and disc edge to insure that they were not damaged in handling. This is especially important in the case of valves with “fail-open” actuators.
4. Confirm that the materials of construction listed on the valve nameplate are appropriate for the service intended and are as specified.
5. Locate the directional arrow on the body that defines the preferred mounting orientation in respect to the pressure. In most cases, the valve is properly installed when the actual fluid flow or high pressure is acting on the front face of the disc when the valve is closed.
6. Ensure that the packing gland bolting nuts are tight.

CAUTION: The valve should be installed in the closed position to insure that the seat and disc are not damaged during installation. Particular care should be taken with valves equipped with “fail open” actuators. Failure to insure proper handling may result in damage to the valve.

If the pipe is lined, confirm that the disc rotation does not contact the lining during the opening stroke. Failure to confirm that the disc rotation does not contact the lining may result in damage to the valve.

Important

Whenever possible, install the valve with the shaft in the horizontal position and, if possible, with the cast-in disc stop located top-side of the pipe. If the shaft cannot be positioned horizontally, position the shaft so that it is not on the vertical centerline in a horizontal pipe run. This will minimize any depositing of solid particles present in the fluid into the lower bearing.

tyco Flow Control

Keystone and K-LOK are either trademarks or registered trademarks of Tyco International Services AG or its affiliates in the United States and/or other countries. All other brand names, product names, or trademarks belong to their respective holders.

Copyright © 2010 Tyco Flow Control. All rights reserved.

Installation

The valves are shipped with flange gasket surface protection. Before installing the valve, remove the protection and carefully clean and de-grease both surfaces with a solvent.

Series 36 and 37 – Lug Style

1. Orient the valve with the directional flow arrow (preferred direction) pointing in the proper direction.
2. Insert the valve between the flanges until the two bottom holes in the valve align with the two lower flange holes.
3. Insert a bolt or stud through the flange and thread it into the holes in the valve body. This will allow the valve to center itself properly for the installation of the flange gaskets.
4. Install the flange gaskets and the remaining flange bolting.
5. Use the crossover method to tighten all flange bolting.

Series 36 and 37 – Wafer Style

1. Orient the valve with the directional flow arrow (preferred direction) pointing in the proper direction.
2. Insert the valve between the flanges until the alignment holes at either side of the valve match the corresponding holes in the flanges.
3. Insert a long bolt or stud through the flange and thread it through the alignment hole. This will allow the valve to center itself properly for the installation of the flange gaskets.
4. Install the flange gaskets and the remaining flange bolting.
5. Remove the long bolts/studs from the lower alignment holes and replace with correctly-sized bolts.
6. Using the crossover method, tighten all flange bolts.

Valve Checkout

1. Tighten the packing gland bolting just enough to prevent stem leakage. Over-tightening will decrease packing life and increase operating torque requirements.
2. Check the operation of the valve by stroking it to “full open” and “full close.” To determine the valve orientation of the disc, double D’s and keyways are aligned with the disc. The valve disc travels clockwise to close.
3. For automated valves, set the air pressure/electrical voltage for at least the minimum given to operate the actuator. For pneumatic actuators, do not apply more than 1.25 times the pressure for which the actuator was designed.

Note: for spring return actuators with positioners, overpressure will cause excessive time delay in the spring movement for the valve disc to travel out of the seat.

Operation

The K-LOK has been designed to require a minimum of maintenance. Generally, only maintenance on the packing box is required.

Maintenance

If shaft leakage is observed through the packing box, tighten the gland nuts.

Note: do not over-tighten packing box gland nuts. Over-tightening will increase the torque required to operate the valve. When tightening the gland nuts, use half-turn increments until leakage has stopped.

Disassembly

To begin disassembly, refer to the part lists (Figures 1 and 1a) and proceed as follows:

Warning
Depressurize the valve and associated piping before disassembly. Failure to do so may cause serious personal injury and/or equipment damage.

1. Remove the valve from the line. Clean the valve according to proper cleaning procedures as outlined by the plant or according to a prescribed procedure.
2. Remove the actuator and relevant connecting key. Note the actuator position relative to the valve.

Caution
Throughout disassembly and assembly, always use cardboard or brass shims to protect the valve body, disc, flange and sealing surfaces from damage. Failure to do so may result in serious damage to the valve.

Removing the Disc-to-stem Tapered Pin Connections

1. Open the valve disc (2A) to its full open position.

Note: on valve sizes 10" and larger, it is recommended that two workers perform the disc tapered pin (2D) removal process.

2. Place the disc in a vise.
3. Using a tool steel punch, locate the punch on the small end of the disc taper pin (2D) and then strike the punch with a heavy hammer.

Note: Some of the weld on the taper pins (2D) may need to be removed by grinding.

Valve properly clamped in place.

Warning
When placing the valve into the bench vise, make sure the small end of the disc (2A) taper pin faces the assembler.

Hold the punch with a punch holder or a pair of vise grips. Otherwise, serious injury may occur.

Copyright © 2010 Tyco Flow Control. All rights reserved.

Removing the Bottom Cover Assembly

To disassemble the bottom cover assembly, remove the following bottom cover assembly components:

- bottom cover plate (14)
- bottom cover gasket (12)
- washer (18)
- screw (19)

Removing the Lower Stem Assembly

Caution
Throughout this operation, make sure the disc edges remain protected from contact with the body by installing cardboard at all disc hub areas. Failure to do so may cause damage to the disc sealing edge.

1. Spray penetrating oil into the disc hub where it meets the stem connection.
2. Insert an eyebolt into the lower stem (2C) and use it to pull the lower stem (2C) out of the disc (2A). See chart below for proper eyebolt size.

Valve Size	Tap
2" to 6"	M6 X 1
8" to 12"	M10 X 1.5
14" to 36"	M14 X 2

3. Lightly strike the backside of the disc hub area with a hammer if the stem is resistant to removal.

Removing the Packing Gland Assembly

1. Unthread the nuts (19) from the packing gland studs (11).
2. Remove the packing gland bridge (4).

Removing the Upper Stem and Disc

Caution
Throughout this operation, make sure the disc edges remain protected from contact with the body by installing cardboard at all disc hub areas. Failure to do so may cause damage to the disc sealing edge. Protect the stem from the vise teeth to prevent damage and to eliminate potential for packing leakage.

1. When removing the upper stem (2B) from the disc (2A), clamp the vise jaws on to the upper stem (2B) area above the valve body top plate.
2. Once the vise jaws are secure against the upper stem (2B), drive the wedge-shaped chisel/punch between the valve body (1) top plate and the bench vise.

How the upper stem is removed from the upper disk hub.

3. As the valve body (1) moves away from the bench vise, the upper stem (2B) is removed from the upper disc (2A) hub.
4. Continue to reposition the valve body (1) with the bench vise so as to allow removal of upper stem (2B).

Caution
Physically hold the disc to prevent the disc from falling and becoming damaged during removal. When both the upper stem (2B) and lower stem (2C) are removed from the disc (2A), the disc is unsupported.

Warning
Smaller discs may be removed by hand (2" to 8"). Remove larger discs with proper hoisting equipment. Failure to do so may result in personal injury or damage to equipment.

Removing the Seat Retainer Ring

Remove the seat retainer ring (9) by removing the hex socket screws (15) from the seat retaining ring for the lugged body, or the hex socket flat head screws (15) from the locating plates (16) and/or clips for the wafer body.

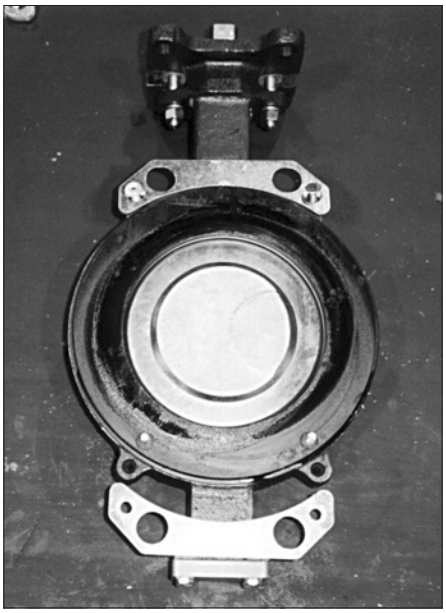

Seat retainer ring and parts.

Removing the Seat Retainer Gasket

Remove the seat retainer gasket (8). Use a powered wire brush tool to remove the gasket material that may have adhered to the mating body surfaces.

Removing the Seat Assembly

To remove the seat assembly, treat the seat (7) and its associated components as a single assembly by removing the following:

- seat (7A)
- wire wrap (7C)
- seat backing ring (7B)

Removing the Packing Assembly Method 1: for Packing Replacement with Stem in Body

1. Using the screws, grab and remove each packing ring, one at a time.

Note: to remove the packing set (6) with the upper stem (2B) still in the valve body (1), two long, slender screws are required. The screws must not have a diameter greater than 1/4" and must be at least six inches long. The most commonly used screws are “drywall screws.”

Copyright © 2010 Tyco Flow Control. All rights reserved.

Figure 1

Lug Style

1	Body
2A	Disc
2B	Upper Stem
2C	Lower Stem
2D	Taper Pin
2E	Disc Locating Spacer
3	Packing Gland Follower
4	Packing Gland Bridge
5	Stem Bearing
6	Stem Packing
7A	Seat
7B	Seat Backing Ring
7C	Seat Wire Wrap
8	Seat Retainer Ring Gasket
9	Seat Retainer Ring
10	Anti-Extrusion Ring
11	Packing Gland Stud
12	Bottom Cover Gasket
13	Stem Retention Ring
14	Bottom Cover
15	Hex Socket Head Screw
16	Washer Split
17	Hex Nut
18	Washer External Tooth
19	Hex Screw

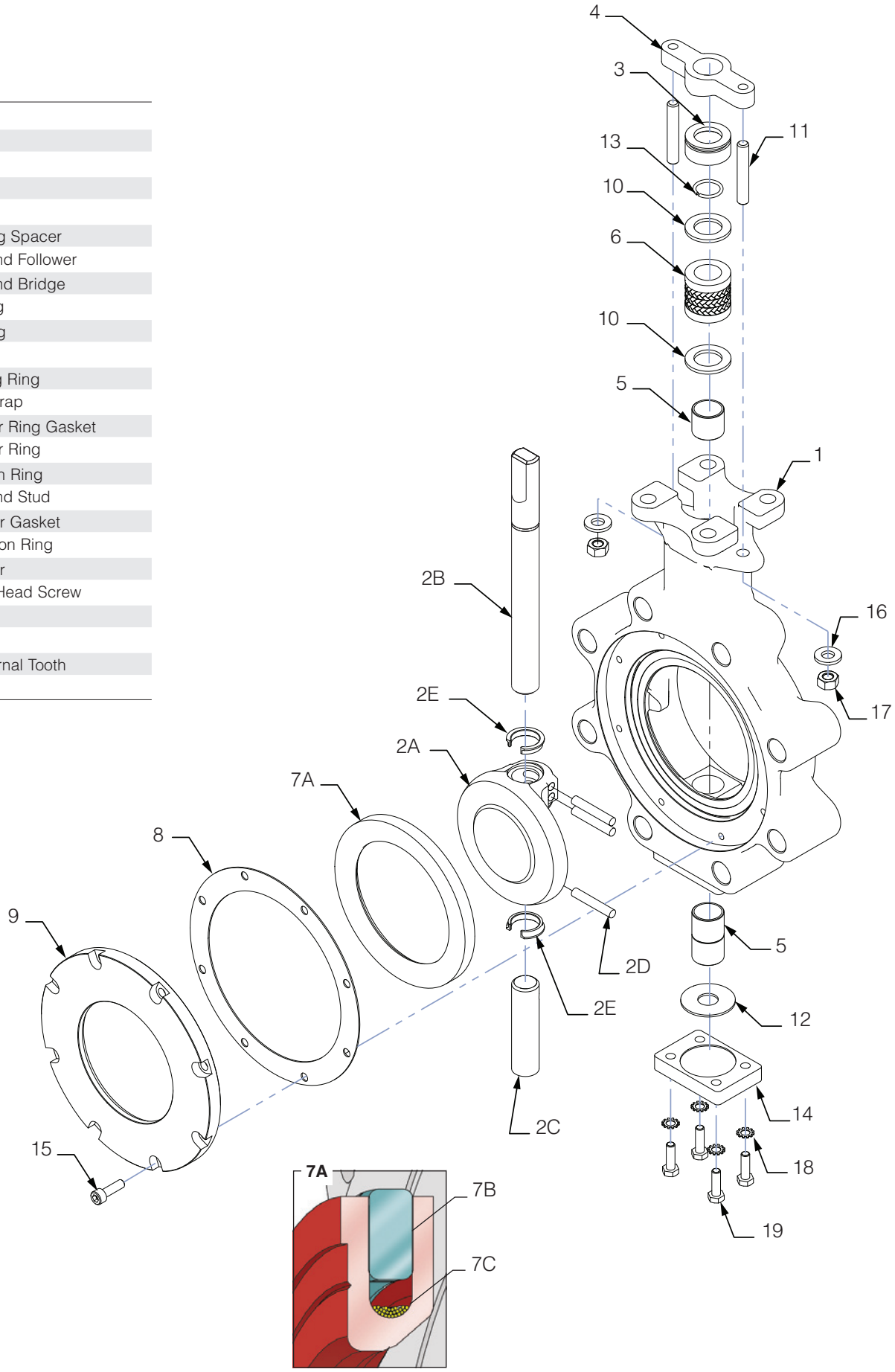

Copyright © 2010 Tyco Flow Control. All rights reserved.

Figure 1a

Wafer Style

1	Body
2A	Disc
2B	Upper Stem
2C	Lower Stem
2D	Taper Pin
2E	Disc Locating Spacer
3	Packing Gland Follower
4	Packing Gland Bridge
5	Stem Bearing
6	Stem Packing
7A	Seat
7B	Seat Backing Ring
7C	Seat Wire Wrap
8	Seat Retainer Ring Gasket
9	Seat Retainer Ring
10	Anti-Extrusion Ring
11	Packing Gland Stud
12	Bottom Cover Gasket
13	Stem Retention Ring
14	Bottom Cover
15	Hex Socket Flat Head Screw
16	Washer Split
17	Hex Nut
18	Washer External Tooth
19	Hex Screw
20	Flange Locator Plate (Wafer only)

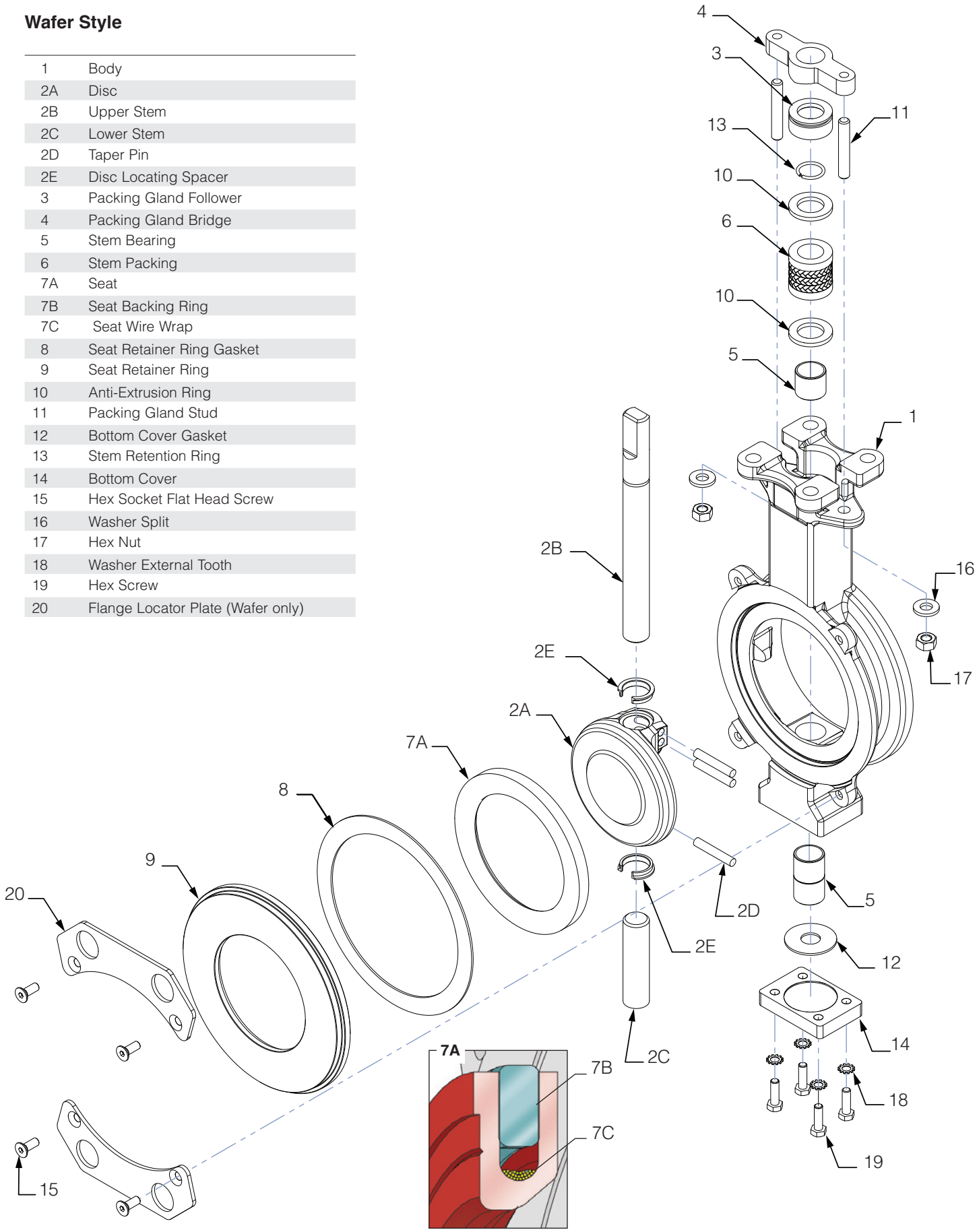

Copyright © 2010 Tyco Flow Control. All rights reserved.

Method 2: packing Removal with Stem Removed from Body

1. To remove the packing set (6) with the upper stem removed, use a hook-type tool to pull out one packing ring at a time.

Removing the Stem Bushings

Note: a special bushing removal/installation tool is required to remove or install the stem bushings (5). The tool O.D. dimension should be as near in size as the valve stem bore I.D. dimension and have a Class 3 fit. Any Machinist Handbook can provide Class 3 tolerances.

1. Insert the removal tool in the valve body (1) top plate area and down the upper stem journal until the tool contacts the upper stem bushing.
2. Remove the upper stem bushing (5) by striking the tool with a hammer.
3. Insert the removal tool in the valve body (1) bottom plate area and down the lower stem journal until the tool contacts the lower stem bushing.
4. Strike the tool until the lower stem bushing (5) is clear of the lower body stem journal.

Inspecting the Valve Components

1. After disassembly, visually inspect the seat retainer ring (9) and the bottom cover plate (14).
2. Make sure all body sealing surfaces:
   - are flat
   - are free of corrosion damage
   - have a smooth surface
   - are free of burrs.

Remove any burrs with fine grit sandpaper.

3. Inspect for scratches around disc edges:
   - If scratched, smooth the edge with fine grit sandpaper (220/400 wet/dry sandpaper)
   - Remove the scratch by using a blending motion and extend the smoothed area at least two inches above, below and around the original scratch
   - To polish the disc edge, use a powered wire brush
   - Finish sand or polish the edge on a lathe, as required.
4. Check to see that the upper and lower (2B, 2C) stem-to-bushing (5) contact locations are free of galling.
5. Check to see that the upper (2B) stem-to-packing (9) contact area is free of scratches.

Note: if scratched or galled, these surfaces should be polished or replaced.

Assembly

Installing Stem Bushing

1. To avoid damaging the stem bushing (5), gently press the bushing into the stem body journal by lightly striking the bushing (5) with a rubber mallet.
2. Once the stem bushing (5) has been partially inserted into the valve body journal, insert the installation/removal tool against the upper stem bushing.

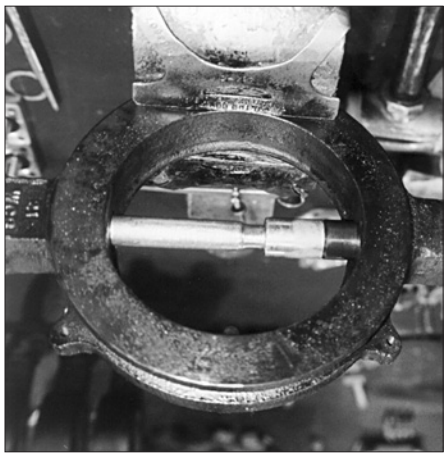

Partial insertion of the stem bearing.

3. Strike the tool with a hammer to continue inserting the stem bushing until it is flush with the body flowpath surface.

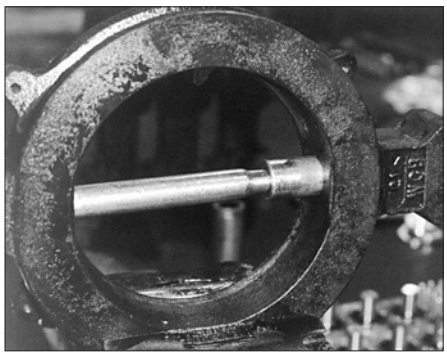

Stem bushing flush with the flow path surface.

Installing the Disc/Stem Assembly

CAUTION

To prevent damage to the disc, do not allow the disc edges to contact the body flowpath surface.

1. Install the upper stem (2B) and lower stem (2C) into the valve body stem journals with the pinning grooves position on top of the stem side view.

Note: The upper and lower stems are correctly installed when the lower ends of the stems are flush with the body flowpath surface.

2. While holding the disc (2A) with the backside of the disc facing up and the double pin hub facing toward the body (1) upper stem journal, position the disc (2A) in the body (1).
3. Push the stems (2B and 2C) into the disc (2A) hub stem holes.
4. If required, rotate the stems until the stem tapered pin holes are in alignment with the disc (2A) hub tapered pin holes.
5. Manually push the disc tapered pins (2D) to install them through the disc hub tapered pin holes.
6. Install the packing set (see Installing The Packing Set).
7. Carefully drive the tapered pins (2D) firmly into the connection with a punch and hammer.

Installing the Packing Set

1. Install the anti-extrusion packing ring (10), packing set (6) and packing gland (3) into the upper journal of the valve body (1).
2. Keeping the disc assembly (2) in the closed position and closely centered in the body bore, tighten the packing nuts (17). Nuts have been correctly tightened when the packing gland plate (4) is flush with the valve body (1) top plate.

Installing the Bottom Cover Assembly

1. Place the bottom cover gasket (12) on the bottom cover plate (14) gasket groove.

Copyright © 2010 Tyco Flow Control. All rights reserved.

2. Align the bottom cover plate (14) with the body (1) bottom surface, making sure the bottom cover gasket (12) remains in alignment with the bottom cover plate (14) gasket groove.
3. Tighten the four bolts and washers (18, 19).

Installing the Standard Seat Assembly

1. Check to make sure the disc (2A) is in the closed position against the body (1) disc stop.
2. Install the seat with the smallest inside diameter down. If the seat is incorrectly installed, it will ride higher on the disc than if installed correctly.

To install RTFE, PTFE and UHMWPE Seats:

1. Place the seat backing ring (7B) into the seat (7A).
2. Press the backing ring into the seat (7A) until no gaps are present between the backing splits.
3. Rotate the seat assembly until the seat backing ring (7B) splits align with the body stem journals.
4. Place the seat assembly (7) into the valve body (1) seat pocket. The seat assembly is correctly placed when the "V" groove on the side of the seat (7) is facing toward the assembler.

To install NBR, EPDM and Fluoroelastomer (FKM) Seats:

1. Place the seat assembly (7) into the valve body (1) seat pocket.
2. Install the seat with the smallest inside diameter down. If the seat is incorrectly installed, it will ride higher on the disc than if installed correctly.
3. For lug style bodies align the seat retainer ring gasket (8) holes with the holes in the body.

Note: Elastomer seated trims do not require a retainer gasket.

4. Place the seat retainer ring (9) on top of the seat retainer gasket (8). For lug style valves align the holes in the seat retainer ring (9)with the holes in the gasket (8) and the body (1).
5. Place the locating plates (16) and/or clips (22 for wafer style valve body.

Note: Sizes 14" to 24" wafer style body valves employ both clips (22) and locating plates (16) to retain the seat retainer ring (9). Size 30" and 36" wafer and lug body valves use seat retainer screws (17). Two of the seat retainer screw holes are tapped. The two tapped holes allow the use of eye bolts so the seat retainer ring can be lifted to and from the body (1).

6. Install and tighten the screws (15).

CAUTION

The standard seat retainer screws provide only enough force to hold the seat retainer ring (9) for shipment and installation. If valve actuation is required before installation, press the seat retainer into the seat to prevent damage to the valve seat before actuation.

---

7. Press the seat retainer ring into the seat (7) and body (1) using two C-clamps to provide the needed compressive load. To press the seat retainer ring with the C-clamps, place the C-clamps on the valve assembly to allow an even load to be applied all around the seat retainer ring (9) and tighten until the seat retainer gasket (8) is compressed.
8. With the C-clamps pressing the seat retainer ring (9) into the gasket (8). Tighten the screws (15).

CAUTION

To prevent damage to the valve when clamping, protect the body flange surfaces from the vise clamping surfaces with cardboard or brass shims.

Installing the Seat Retainer Ring

1. Check to make sure the disc (2A) is in the closed position against the body (1) disc stop.
2. Put the seat retainer gasket (8) on the valve body (1) gasket surface.

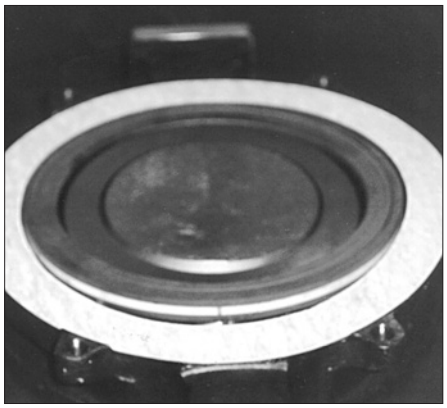

Proper placement of seat retainer gasket.

TIG Welding of the Disc Taper Pins

1. After assembling and testing the valve, lock the three disc/stem taper pins (2D) by forcefully driving the tapered pins in place with a hammer and steel punch.
2. TIG weld the disc taper pins (2D). Weld using filler rod referenced in Table I.

Table I

Stem and Pin Material	Filler Rod
17-4 pH 1075 HT	312 Stainless Steel
17-4 Ph 1160 DHT (NACE)	312 Stainless Steel
316 Stainless Steel Condition B	312 Stainless Steel
K Monel 500®	Monel®
Inconel®	Inconel®

Copyright © 2010 Tyco Flow Control. All rights reserved.

Symptom	Possible cause	Resolution
Valve won't rotate	1. Actuator has failed 2. Valve packed with debris 3. Stem key has sheared	1. Repair or replace 2. Flush or clean valve to remove debris 3. Determine cause of shearing and correct, replace
Stem packing leaking	1. Gland flange bolting loose 2. Packing damaged	1. Tighten gland flange bolting 2. Depressurize valve and replace packing
Bottom cover gasket leaking	1. Bottom cover bolting loose 2. Gasket damage	1. Tighten bottom cover bolting 2. Remove valve from service and replace gasket
Valve leaking	1. Valve not fully closed 2. Debris trapped in valve 3. Seat or disc edge damaged 4. Actuator mechanical closure stop incorrect	1. Close valve 2. Cycle and flush to remove debris 3. Remove valve from service and replace seat and/or repair or replace disc 4. Adjust the stop to allow further closure
Jerky operation	1. Stem/bearing damaged 2. Actuator/stem adapter misaligned 3. Overtightened packing 4. Air supply inadequate	1. Disassemble valve and inspect for damage, repair or replace damaged parts, reassemble 2. Remove actuator mounting and realign 3. Loosen packing to hand tight, cycle valve, retighten 4. Increase air supply pressure

www.keystonevalves.com

Tyco Flow Control (TFC) provides the information herein in good faith but makes no representation as to its comprehensiveness or accuracy. This data sheet is intended only as a guide to TFC products and services. Individuals using this data sheet must exercise their independent judgment in evaluating product selection and determining product appropriateness for their particular purpose and system requirements. TFC MAKES NO REPRESENTATIONS OR WARRANTIES, EITHER EXPRESS OR IMPLIED, INCLUDING WITHOUT LIMITATION ANY WARRANTIES OF MERCHANTABILITY OR FITNESS FOR A PARTICULAR PURPOSE WITH RESPECT TO THE INFORMATION SET FORTH HEREIN OR THE PRODUCT(S) TO WHICH THE INFORMATION REFERS. ACCORDINGLY, TFC WILL NOT BE RESPONSIBLE FOR DAMAGES (OF ANY KIND OR NATURE, INCLUDING INCIDENTAL, DIRECT, INDIRECT, OR CONSEQUENTIAL DAMAGES) RESULTING FROM THE USE OF OR RELIANCE UPON THIS INFORMATION. Patents and Patents Pending in the U.S. and foreign countries. Tyco reserves the right to change product designs and specifications without notice. All registered trademarks are the property of their respective owners. Printed in the USA.

Copyright © 2010 Tyco Flow Control. All rights reserved.