INSTALLATION, OPERATION AND MAINTENANCE INSTRUCTION MANUAL

Equipment Description

Duo-ChekValves

Installation and Operation

1. Remove the valve from carton or packing skid.
2. The protective rust proof coating on the internal parts of steel or cast iron valves should be removed by brushing out with any standard petroleum solvent (Varsol, Kerosene), and air dry. Insure internal parts operate freely.
3. Stainless Steel or Bronze valves need only to be wiped clean and installed.
4. In horizontal flow installation, the hinge pin must be vertical.
5. Insert the valve between two companion flanges of the same series as the valve and place gaskets on flange faces. The arrow on the valve or name plate indicating direction of flow should coincide with line flow. Install studs through companion flanges and tighten, using standard industry practice.
6. In liquid service we recommend valve be installed at least five (5) pipe diameters downstream from a pump discharge and/or other pipe fittings for maximum service life. Consult factory.

Maintenance

Caution! Make sure the valve is not under pressure before starting any maintenance.

Disassembly** (Refer to assembly drawing on next page.)

1. Lay valve down with the downstream side of the valve upward.
2. Remove stop pin retainers (6) and hinge pin retainers (7).
3. Remove stop pin (3), being careful with the short hooked spring legs on valves 6” and larger.
4. Remove hinge pin (4) out of the body (1) while holding spring(s) firmly as some are preloaded and may snap out. **Observe caution.**
5. Remove springs (5), plates (2), and bearings (8), (9), and (10).

Assembly**

1. Lay body down with downstream side of valve upward.
2. Clean all parts in a suitable solvent.
3. Position both plates (2) in body (1) with hinge lugs together and align with pin holes. If valve is equipped with support sleeves (11), assemble into plate with body bearings (9).
4. Lay springs (5) in plate (2) recess, between lugs, with short hooked leg extending upward on valves 6” and larger (other longer leg to contact plate). On smaller valves, spring(s) (5) without short leg, wind spring legs 180°, install with legs contacting each plate and hold to insert hinge pin (4) in step 6.
5. Insert all bearings provided, (8), (9) and (10).
6. Insert hinge pin (4) through plate lugs (2), bearings, (8), (9), (10), and through spring coils (5).
7. Pull stop pin leg of spring (short hooked leg) toward plate leg and insert stop pin (3). Repeat until stop pin is fully inserted in body holes.
8. Install hinge pin retainers (7) and stop pin retainers (6) using PTFE tape or a suitable thread sealing compound.

** No Special tools are required.

Crane Duo-Chek Valves

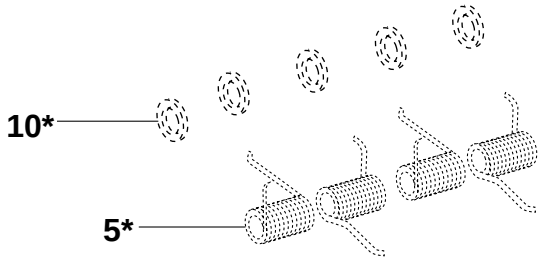

Item No.	No. Req'd	Description
1	1	Body
2	2	Plate
3	1	Stop Pin
4	1	Hinge Pin
5	2*	Spring
6	2	Stop Pin Retainer
7	2	Hinge Pin Retainer
8	4**	Plate Lug Bearing
9	4**	Body Lug Bearing
10	3*	Spring Bearing
11†	2	Support Sleeve

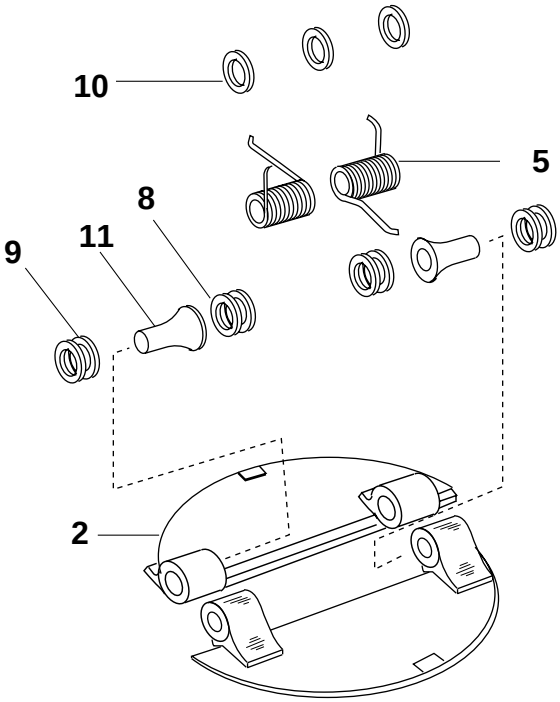

* Some valves require 4 springs & 5 spring bearings

** These quantities may vary according to the valve size

† Not required on valves smaller than 24"

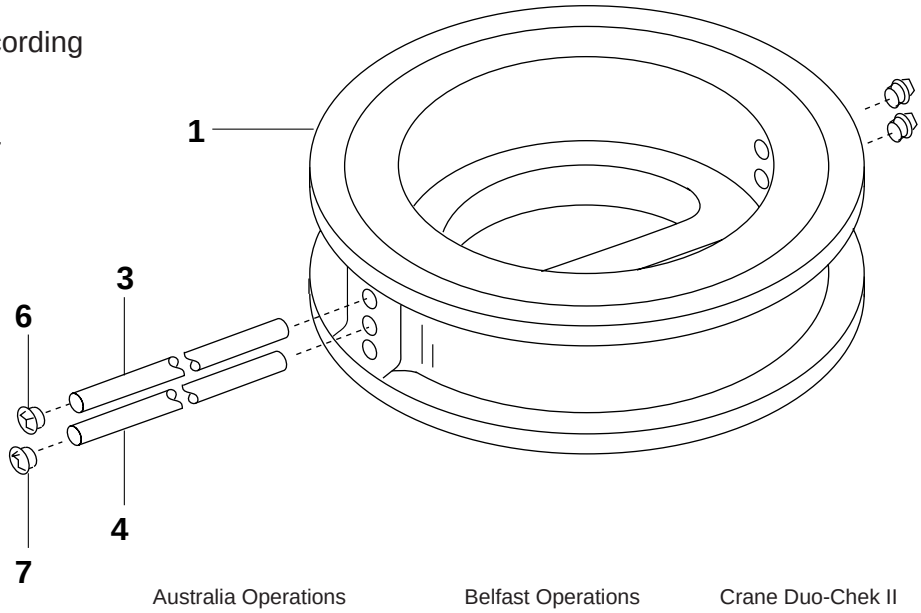

CRANE
ENERGY FLOW SOLUTIONS

Australia Operations
322 Settlement Road
Thomastown, VIC 3074
tel: +613-9465-2755
fax: +613-9466-1365

Belfast Operations
6 Alexander Road
Cregagh, Belfast BT6 9HJ
tel: +44-2890-704222
fax: +44-2890-401582

Crane Duo-Chek II
9860 Johnson Road
Montgomery, TX 77316
tel: 936.588.4447
fax: 936.588.4427