MORIN

Ductile Iron/Stainless Steel Cylinders Quarter-turn Spring Return and Double Acting Actuators Output Torques to 1,400,000 lb.in.

Features and Benefits

- Ductile iron housing, piston and end caps provide long product life with durable, cost effective operation.
- Output shaft made of high strength alloy steel or 17-4PH stainless transmits torque without fatigue.
- Sintered bronze bushings or Teflon® composite on output shaft eliminate side loading of valve stem to maximize stem packing performance.
- Chrome-plated steel piston rod provides strength and corrosion resistance for enduring high cycle applications.
- Sintered bronze piston rod bushings provide low-friction support and precise alignment of the piston rod to increase efficiency, reduce maintenance and extend actuator life.
- Heat-treated stainless steel thrust pin and rollers transfer piston force to 17-4PH stainless steel or ductile iron yoke by rolling to reduce friction, for longer life and more efficient torque transmission.
- Teflon® guide bands ensure low-friction piston guidance during operation to protect cylinder walls from potential scoring and extend seal performance with a continuous cylinder wiping action.
- Bi-directional travel stops provide accurate valve rotation adjustment.
- ISO 5211 mounting pattern promotes easier valve adaptation by utilizing internationally recognized standards.
- Both Series B and C have been certified to SIL 3 ratings.

- Actuators are rated IP66.
- NAMUR drive slot on output shaft enables accessory-driven components to maintain a compact assembly and eliminates the need for couplings.
- Tectyl-coated springs can be disarmed without special tools to safely and easily disassemble the actuator in the field, reducing down time and providing a “man safe” spring.
- Easily removable housing cover provides effortless access for internal inspection of yoke mechanism.

Technical Data

Supply pressure:	40 to 160 psig (see torque chart, MORMC-0333)
Supply medium:	Air or any gas compatible with materials of construction.
Temperature rating	
Standard range:	-20°F to 210°F
Optional range:	-65°F to 300°F
Angular rotation:	90 degrees ± 8 degrees

tyco Flow Control

Morin is either a trademark or registered trademark of Tyco International Services AG or its affiliates in the United States and/or other countries. All other brand names, product names, or trademarks belong to their respective holders.

Copyright © 2011 Tyco Flow Control. All rights reserved.

Morin has a Rugged Heart

Morin Scotch Yoke

The heart of any scotch yoke actuator is the yoke. Morin uses either 17-4PH or ductile iron for this critical area as standard.

The yoke is the mechanism used to convert linear force to torque. The yoke is critical to actuator performance. It must be rugged, yet precisely machined to give long life at high efficiency. Morin understands this and ensures that all our yoke designs meet this test.

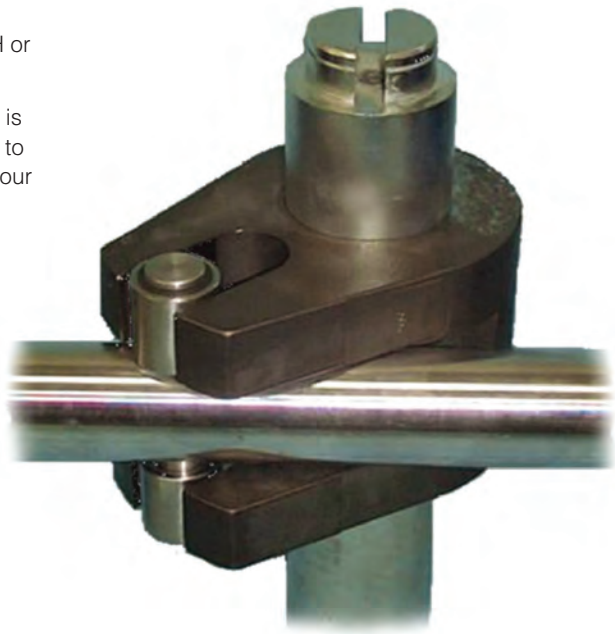

Principles of Construction

Using high quality materials of construction and modern rugged design concepts Morin becomes the standard for low cost valve actuation while providing high quality performance.

The actuator housings are all machined from ductile iron castings. This produces a rugged, low cost product through reduced machining time and by eliminating wasteful excess material.

Any components that rotate or slide during operation, such as the high strength output shaft, chrome-plated piston rod, stainless steel thrust pin or the ductile iron piston, are all supported by replaceable friction reducing bearings.

Bi-directional Travel Stops

Adjustable stops on each end cap provide the flexibility of accurate valve rotation positioning at the end of the "open" and "close" stroke. Both stops are located on the cylinder centerline, the optimal position to maximize travel adjustment and eliminate any detrimental side loading on the travel stops. Adjustable from 82° to 98°.

Spring Designed for Safety

All spring return models incorporate a "man safe" spring design that allows the actuator to be safely assembled and disassembled in the field without the need for special tools. The integral tie rods are bored and tapped to provide a means of loading and unloading the spring in a safe and convenient manner.

Morin Understands Actuator Design

Morin understands that the most efficient design for one torque range is not the most efficient for another. Morin uses the standard scotch yoke design for lower torque ranges and a side bar design for the higher torque ranges. This gives a rugged design with economic cost.

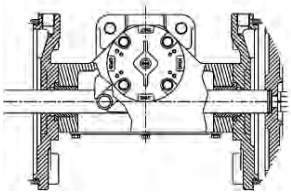

Standard Design, Scotch Yoke

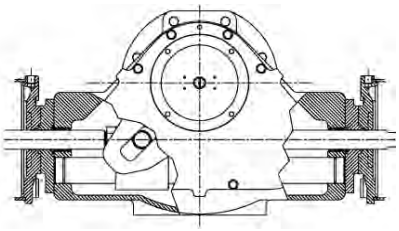

Side Bar Design, Scotch Yoke

Copyright © 2011 Tyco Flow Control. All rights reserved.

Superior materials of construction offer long life, and mean less downtime

Series B or C, Models 135 to 1150

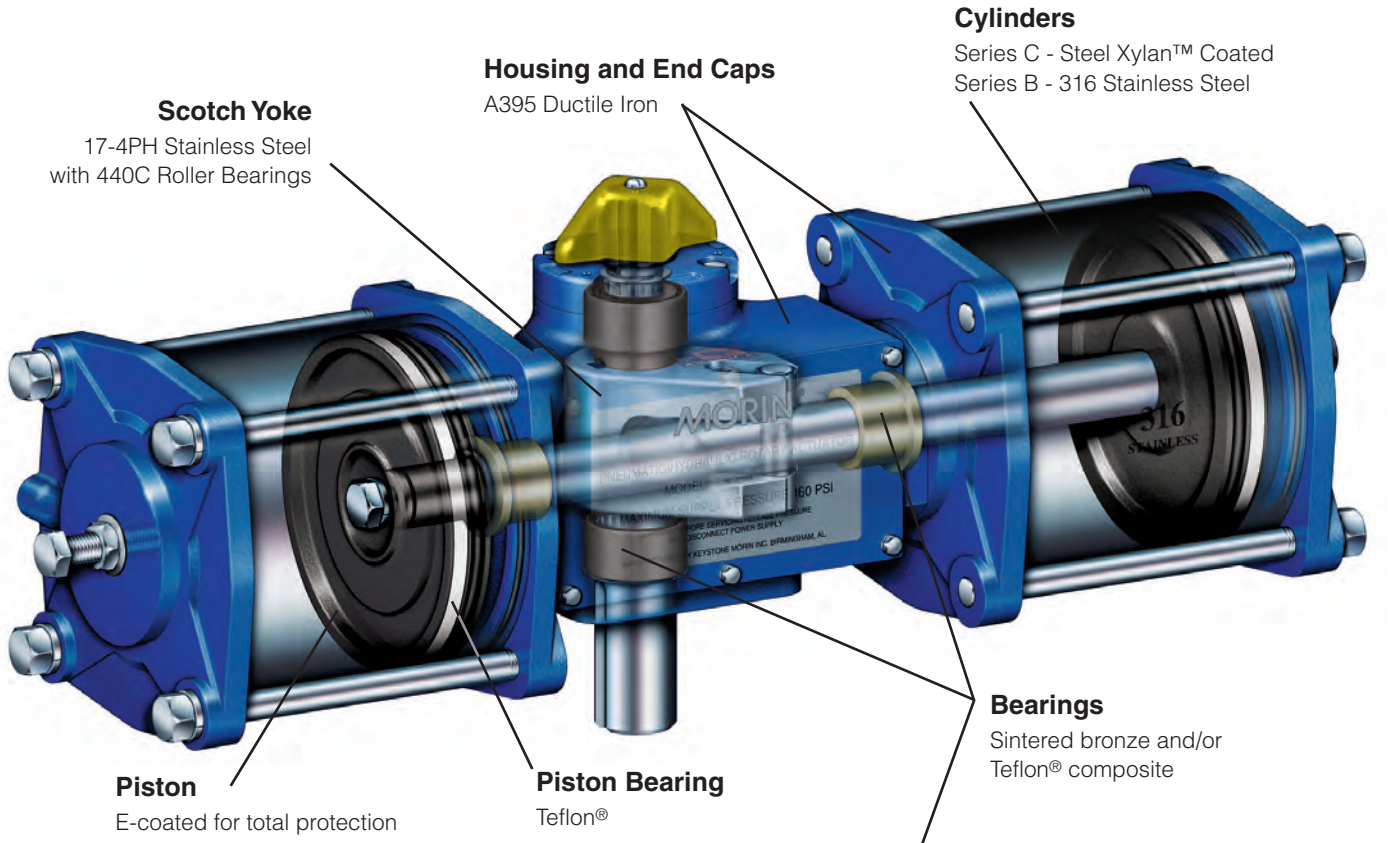

Series B, Models 006 to 100

Morin Series B uses construction identical to the Series C, but with 316 Stainless Steel Cylinders.

Models 006 to 100 use 17-4PH output shaft as standard.

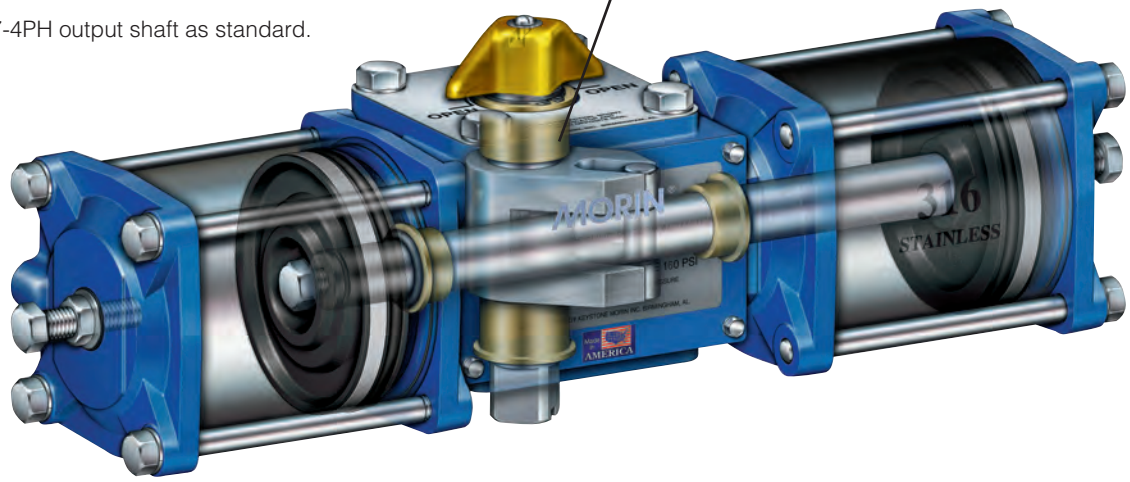

Note: See Morin Series B/C/S IOM for a complete bill of materials.

Copyright © 2011 Tyco Flow Control. All rights reserved.

Symmetrical and Canted Yokes

It's about fitting the torque curve of the actuator to the valve . . .

It's about lower cost, lighter weight, smaller actuators . . .

It's about Choice . . .

Symmetric

Symmetrical Yoke design offers the standard torque curve seen most often in relation to scotch yoke actuators. It offers the increased torque advantage at both ends of the 90° stroke as shown on the blue curve below. This torque curve covers most quarter-turn applications.

Canted

Canted Yoke design moves the torque curve to where it's needed most, gaining as much as 35% more break and reseat torque for the same size actuator. The canted yoke curve is shown in red below. Canted Yoke actuators allow selection of smaller, lighter, and less expensive actuator packages.

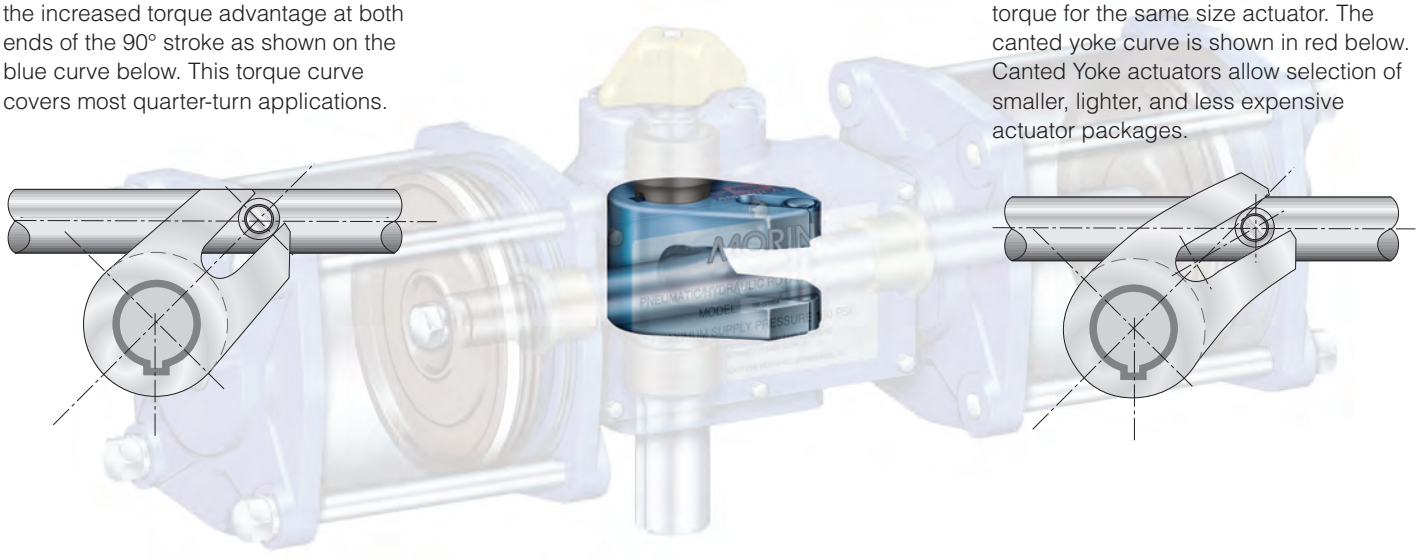

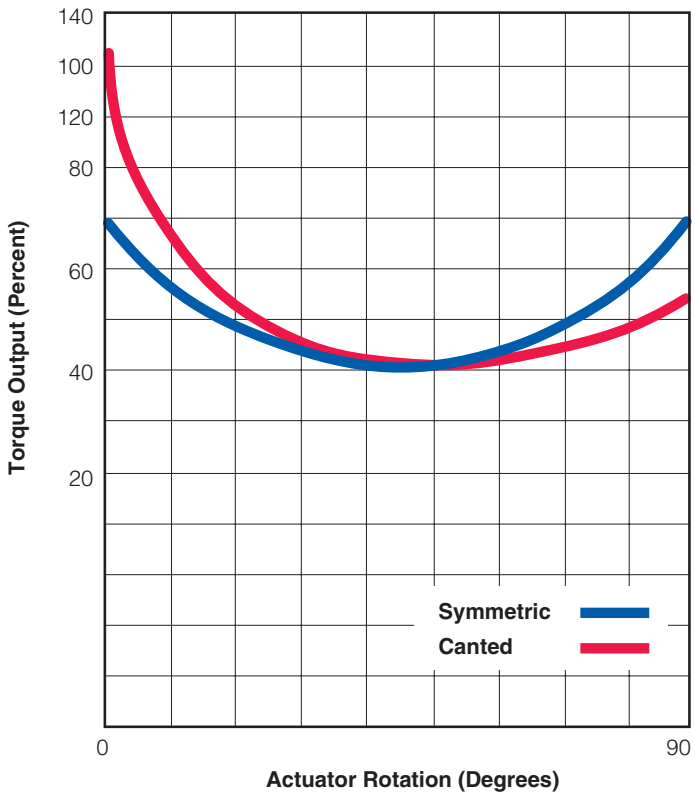

Copyright © 2011 Tyco Flow Control. All rights reserved.

Options

To provide the actuation package best suited for your application, the Morin line offers a full range of manual accessories.

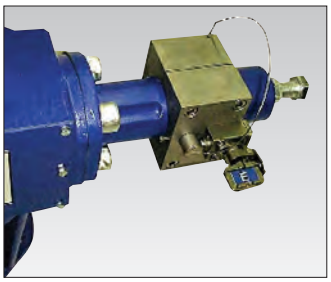

Partial Stroke Test Device (PSTD)

Provides a method of testing ESD packages without shutdown.

Lockout

Integral lockout allows safe shutdowns for maintenance and isolation of systems.

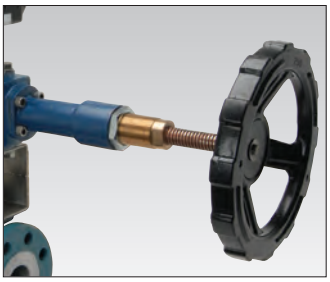

Jackscrew Override (JSO)

Manual operation when power is lost. Simple and effective.

Hydraulic Override (MHP)

Manual operation when power is lost. Includes speed controls.

AWWA

Tested per American Waterworks Association C504. Available for pneumatic or water service operation.

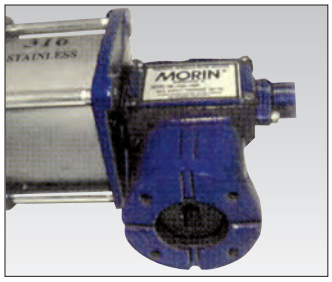

Direct Mounting Cast Adapters

Many valve top works covered, including some ISO mounting. Assures economic but correct mounting alignment.

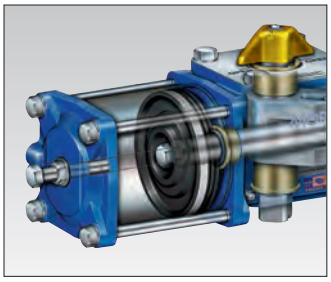

Full Stroke Adjuster

Provides mechanical control of maximum and/or minimum valve stroke.

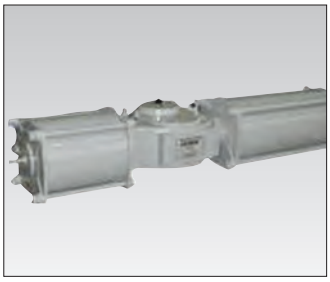

Epoxy Painting (EX)

Offshore rated, three-part coating system for high level of environmental protection.

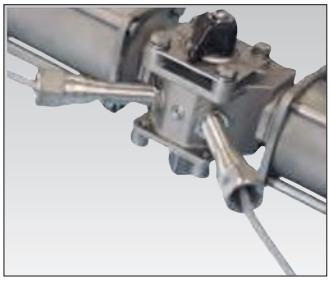

Proximity Switch Preparation

Allows installation of cartridge style proximity switches. Leaves top works open for mounting of other devices.

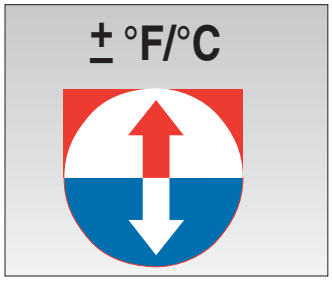

High or Low Temperature Ratings

Standard rating of -20°F to 210°F [-29°C to 99°C] covers most applications. Optional ratings down to -65°F [-54°C] and up to 300°F [149°C].

Optional Certification for CE

Manufactured in accordance with the Pressure Equipment Directive 97/23/EC and ATEX 94/9/EC.

Copyright © 2011 Tyco Flow Control. All rights reserved.

Mechanical Data

Actuator Model	Closing Torque @ 80 psig Symmetrical	Closing Torque @ 80 psig Canted	Number of Pistons	Cylinder Bore (inch)	Stroke (inch)	Volume[1] Cubic In 90° Stroke	Cycle Time[2] Seconds 90° Stroke	Weight (lbs.)
Double Acting								
006	600	–	1	2.750	2	12	0.5	11
015	1500	–	1	4.375	2	30	1	14
023	2300	2990	1	4.375	3	45	1	30
036	3960	5148	1	5.438	3	70	1.5	33
050	5000	6500	1	6.250	3	92	2.2	39
059	5900	7670	2	4.375/5.438	3	112	2.4	36
072	7920	9009 @ 70 psig	2	5.438	3	137	2.5	41
100	10000	9750 @ 60 psig	2	6.250	3	182	3	49
135	14175	18428	1	8.250	5	267	4.5	165
210	23100	30030	1	10.250	5	413	5	185
270	28350	36855	2	8.250	5	526	6	210
345	36225	41206 @ 70 psig	2	8.250/10.250	5	671	7	234
370	37000	51469	1	12.250	6	707	8	390
420	42000	40950 @ 60 psig	2	10.250	5	816	8.5	257
575	63825	82973	1	15.500	6	1132	9.5	519
740	77700	101010	2	12.250	6	1395	10	530
945	101115	98587 @ 60 psig	2	12.250/15.500	6	1820	11	653
1150	120750	98110 @ 50 psig	2	15.500	6	2245	12	775
1485	169523	247563	2	12.250	12	2791	20	1150
1935	221145	322950	2	12.250/15.500	12	3641	22	1250
2385	272767	398336	2	15.500	12	4491	24	1350
3071	347284	507157	2	19.250/15.500	12	5719	28	2055
3731	421874	616085	2	19.250	12	6947	31	2205
4534	512578	561408 @ 60 psig	2	19.250/23.00	12	8440	35	2550
5336	603282	550627 @ 50 psig	2	23.00	12	9934	39	2925
7114	793589	1099760	2	23.00	16	13245	50	4170
Spring Return								
006	221	–	1	2.750	2	12	0.5	13
015	525	–	1	4.375	2	30	1	20
023	800	1120	1	4.375	3	45	1	38
036	1260	1764	1	5.438	3	70	1.5	46
046	1600	2240	2	4.375	3	88	2	47
058	1600	2240	2	5.438/4.375	3	112	2.3	54
059	1890	2646	2	4.375/5.438	3	112	2.4	54
072	2500	3500	2	5.438	3	137	2.5	60
100	3500	4900	2	6.250	3	182	3	68
135	5670	7938	1	8.250	5	267	4.5	210
210	8085	11319	1	10.250	5	413	5	235
270	10395	14553	2	8.250	5	526	6	250
344	12637	17692	2	10.250/8.250	5	671	7	315
345	13760	19264	2	8.250/10.250	5	671	7	315
370	14893	20850	1	12.250	6	707	8	540
420	15435	21609	2	10.250	5	816	8.5	379
575	21131	29583	1	15.500	6	1132	9.5	779
740	29785	41699	2	12.250	6	1395	10	660
944	27713	38798	2	15.500/12.250	6	1820	11	871
945	32303	45224	2	12.250/15.500	6	1820	11	871
1150	42263	59168	2	15.500	6	2245	12	1082
1485	59333	83066	2	12.250	12	2791	20	1950
1934	66750	103833	2	15.500/12.250	12	3641	22	2025
1935	71601	116849	2	12.250/15.500	12	3641	22	2095
2385	95469	133656	2	15.500	12	4491	24	2150
3071	119336	167070	2	19.250/15.500	12	5719	28	2475
3072	129199	180879	2	15.500/19.250	12	5719	28	2890
3731	147656	206718	2	19.250	12	6947	31	3115
4534	166113	232558	2	23.00/19.250	12	8440	35	3925
5336	211149	295608	2	23.00	12	9934	39	4425
6044	235995	330394	2	23.00/19.250	16	11254	44	6325
7114	277756	388859	2	23.00	16	13245	50	6950

1. Air Consumption:
   Cubic inches shown in chart represent actual free air volume in cylinder between piston and end cap when furthest apart. Air consumption will vary depending on supply pressure. To determine standard cubic feet per minute use the following formula:

SCFM =

$$\left(\frac{\text{Vol. in}^3}{1728}\right)\left(\frac{\text{Supply Air psig} + 14.7}{14.7}\right)\left(\text{Strokes/Minute}\right)$$

Example: Calculate SCFM for Model 023 double acting using 80 psig air supply and 5 strokes/minute.

SCFM =

$$\left(\frac{52}{1728}\right)\left(\frac{80 + 14.7}{14.7}\right)\left(5\right) \quad \text{SCFM} = 0.97$$

2. Cycle times shown represent average time to stroke 90 degrees using standard pilot valves and should be used as a guide only. Cycle times can be increased or decreased dramatically by using speed controls, oversized pilot valves or quick exhaust valves.

How to Order

1. Double Acting (Symmetrical Yoke) example:
   Air supply: 80 psig
   Break/end torque: 23,100 lb.in.
   B-210U-D000
   B: Series
   210: Model number
   U: UNC mounting threads
   D: Double acting
   000: No spring
2. Spring Return (Symmetrical Yoke) example:
   Air supply: 80 psig
   End torque: 8085 lb.in.
   B-210U-S080
   B: Series
   210: Model number
   U: UNC mounting threads
   S: Spring return
   080: Spring set code
3. Double Acting (Canted Yoke) example:
   Air supply: 80 psig
   Break (CCW) torque: 31,185 lb.in.
   End (CW) torque: 30,030 lb.in.
   B-210UC-D000
   B: Series
   210: Model number
   U: UNC mounting threads
   C: Canted Yoke
   D: Double acting
   000: No spring
4. For all spring return models:
   - Use required torque to determine Spring Set Code (see MORMC-0333).
   - All spring sets ending with "0" fail clockwise (40, 50, 60, etc.)
   - All spring sets ending with "1" fail counterclockwise (41, 51, 61, etc.)
   - All symmetrical yoke models between 006 and 100 may be mounted to fail clockwise or counterclockwise by "flipping" along the longitudinal axis.

Copyright © 2011 Tyco Flow Control. All rights reserved.

Series B Dimensions

Models 046, 058, 059, 072 and 100

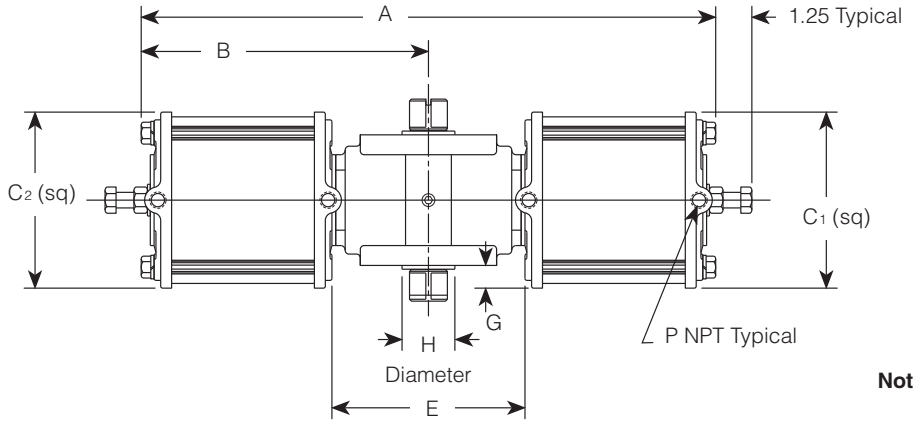

Notes: 1. Shown without pointer for clarity.
2. For mounting dimensions, refer to page 10.

Models 006, 015, 023, 036 and 050

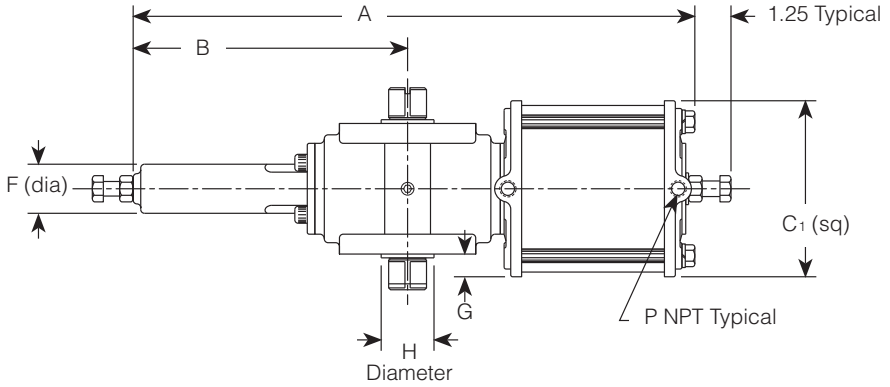

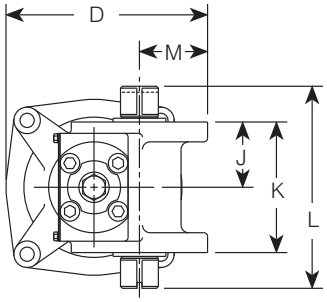

Dimensions (inches), Double Acting

Model	A	B	C1	C2	D	E	F	G	H	J	K	L	M	P
006DA	12.87	5.28	3.18	–	3.87	–	1.09	0.18	1.50	1.50	3.00	4.75	1.31	1/8
015DA	12.31	5.28	4.81	–	4.81	–	1.09	1.00	1.50	1.50	3.00	4.75	1.31	1/4
023DA	18.54	8.88	4.81	–	6.16	–	1.75	0.25	1.75	2.16	4.31	6.69	2.25	1/4
036DA	18.60	8.88	5.81	–	6.66	–	1.75	0.75	1.75	2.16	4.31	6.69	2.25	1/4
050DA	18.55	8.88	7.12	–	7.31	–	1.75	1.38	1.75	2.16	4.31	6.69	2.25	1/4
059DA	19.40	9.66	4.81	5.81	6.66	6.34	–	0.75	1.75	2.16	4.31	6.69	2.25	1/4
072DA	19.35	9.68	5.81	5.81	6.66	6.38	–	0.75	1.75	2.16	4.31	6.69	2.25	1/4
100DA	18.98	9.68	7.12	7.12	7.31	6.38	–	1.38	1.75	2.16	4.31	6.69	2.25	1/4

Dimensions (inches), Spring Return

Model	A	B	C1	C2	D	E	F	G	H	J	K	L	M	P
006SR	12.87	5.28	3.18	–	3.87	–	1.09	0.18	1.50	1.50	3.00	4.75	1.31	1/8
015SR	14.50	5.28	4.81	–	4.81	–	1.09	1.00	1.50	1.50	3.00	4.75	1.31	1/4
023SR	21.95	8.88	4.81	–	6.16	–	1.75	0.25	1.75	2.16	4.31	6.69	2.25	1/4
036SR	23.65	8.88	5.81	–	6.66	–	1.75	0.75	1.75	2.16	4.31	6.69	2.25	1/4
046SR	22.73	9.66	4.81	4.81	6.16	5.58	–	0.25	1.75	2.16	4.31	6.69	2.25	1/4
058SR	22.79	9.73	5.81	4.81	6.66	5.58	–	0.75	1.75	2.16	4.31	6.69	2.25	1/4
059SR	24.44	9.66	4.81	5.81	6.66	5.44	–	0.75	1.75	2.16	4.31	6.69	2.25	1/4
072SR	24.45	9.68	5.81	5.81	6.66	5.44	–	0.75	1.75	2.16	4.31	6.69	2.25	1/4
100SR	24.51	9.73	7.12	7.12	7.31	5.44	–	1.38	1.75	2.16	4.31	6.69	2.25	1/4

Copyright © 2011 Tyco Flow Control. All rights reserved.

Series B and C Dimensions

Models 270, 344, 345, 420, 740, 944, 945 and 1150

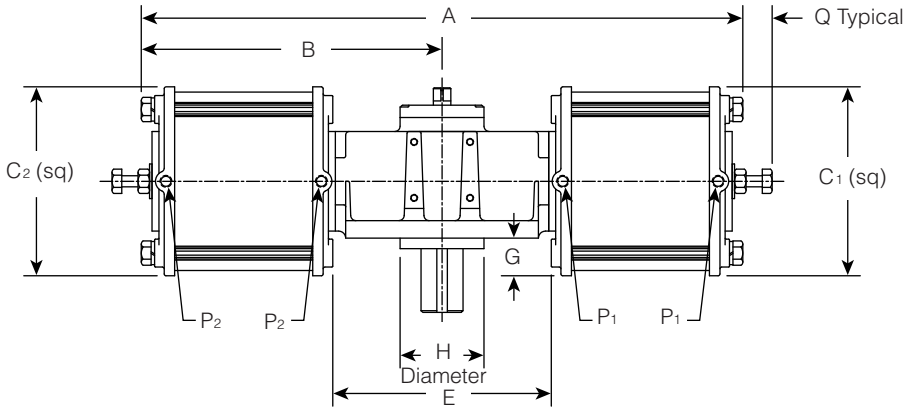

Models 135, 210, 370 and 575

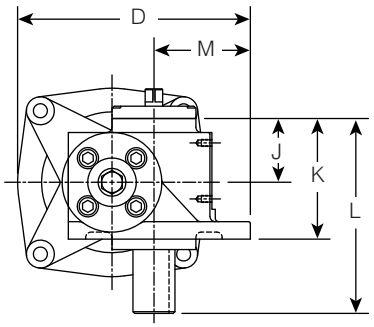

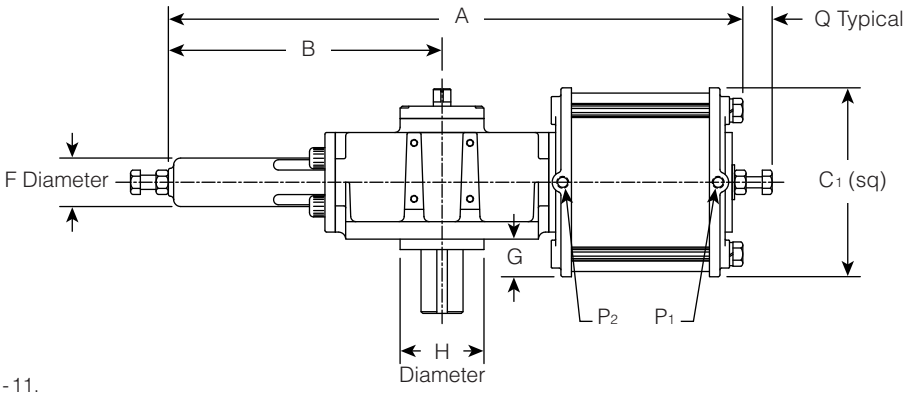

Notes: 1. Shown without pointer for clarity.
2. For mounting dimensions, refer to pages 10 - 11.

Dimensions (inches), Double Acting

Model	A	B	C1	C2	D	E	F	G	H	J	K	L	M	P1	P2	Q
135DA	32.74	15.88	9.50	–	10.44	–	2.75	1.00	–	4.38	8.13	11.82	3.19	3/8	3/8	1.75
210DA	33.26	15.88	11.50	–	11.44	–	2.75	2.00	–	4.38	8.13	11.82	3.19	1/2	1/2	2.12
270DA	33.77	16.89	9.50	9.50	10.44	11.72	–	1.00	–	4.38	8.13	11.82	3.19	3/8	3/8	1.75
345DA	34.26	16.89	9.50	11.50	11.44	11.47	–	2.00	–	4.38	8.13	11.82	3.19	3/8	1/2	2.12
370DA	41.64	19.56	13.50	–	16.75	–	3.50	2.69	5.90	5.44	9.50	14.81	6.88	1/2	1/2	1.75
420DA	34.75	17.38	11.50	11.50	11.44	11.22	–	2.00	–	4.38	8.13	11.82	3.19	1/2	1/2	2.12
575DA	42.26	19.56	17.00	–	18.50	–	3.50	4.44	5.90	5.44	9.50	14.81	6.88	3/4	3/4	2.50
740DA	44.15	22.07	13.50	13.50	16.75	15.62	–	2.69	5.90	5.44	9.50	14.81	6.88	1/2	1/2	1.75
945DA	44.77	22.07	13.50	17.00	18.50	15.25	–	4.44	5.90	5.44	9.50	14.81	6.88	1/2	3/4	2.50
1150DA	45.39	22.69	17.00	17.00	18.50	14.88	–	4.44	5.90	5.44	9.50	14.81	6.88	3/4	3/4	2.50

Dimensions (inches), Spring Return

Model	A	B	C1	C2	D	E	F	G	H	J	K	L	M	P1	P2	Q
135SR	39.46	15.88	9.50	–	10.44	–	2.75	1.00	–	4.38	8.13	11.82	3.19	3/8	3/8	1.75
210SR	42.67	15.88	11.50	–	11.44	–	2.75	2.00	–	4.38	8.13	11.82	3.19	1/2	1/2	2.12
270SR	40.57	16.99	9.50	9.50	10.44	10.95	–	1.00	–	4.38	8.13	11.82	3.19	3/8	3/8	1.75
344SR	40.95	17.38	11.50	9.50	11.44	10.70	–	2.00	–	4.38	8.13	11.82	3.19	1/2	3/8	2.12
345SR	43.79	16.99	9.50	11.50	11.44	10.61	–	2.00	–	4.38	8.13	11.82	3.19	3/8	1/2	2.12
370SR	51.48	19.56	13.50	–	16.75	–	3.50	2.69	5.90	5.44	9.50	14.81	6.88	1/2	1/2	1.75
420SR	44.17	17.38	11.50	11.50	11.44	10.36	–	2.00	–	4.38	8.13	11.82	3.19	1/2	1/2	2.12
575SR	54.12	19.56	17.00	–	18.50	–	3.50	4.44	5.90	5.44	9.50	14.81	6.88	3/4	3/4	2.50
740SR	53.99	22.07	13.50	13.50	16.75	14.75	–	2.69	5.90	5.44	9.50	14.81	6.88	1/2	1/2	1.75
944SR	54.99	22.67	17.00	13.50	18.50	14.37	–	4.44	5.90	5.44	9.50	14.81	6.88	3/4	1/2	2.50
945SR	56.63	22.07	13.50	17.00	18.50	14.16	–	4.44	5.90	5.44	9.50	14.81	6.88	1/2	3/4	2.50
1150SR	57.22	22.69	17.00	17.00	18.50	13.79	–	4.44	5.90	5.44	9.50	14.81	6.88	3/4	3/4	2.50

Copyright © 2011 Tyco Flow Control. All rights reserved.

Series B and C Dimensions

Models 1485, 1934, 1935, 2385, 3071, 3072, 3731, 4534, 5336, 6044 and 7114

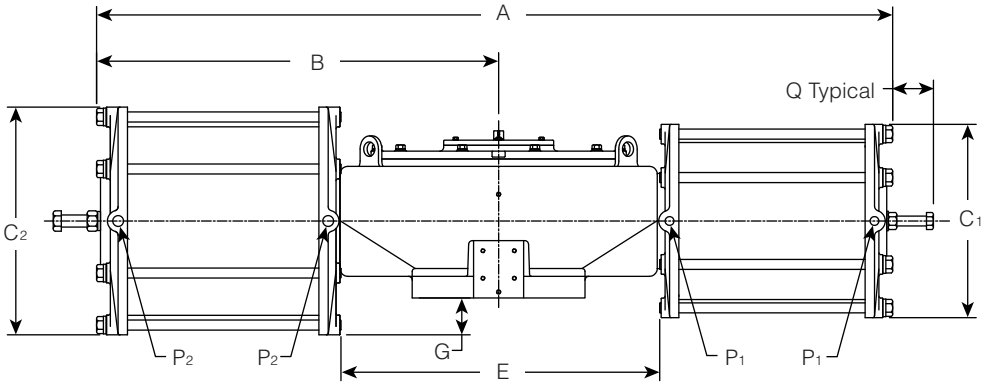

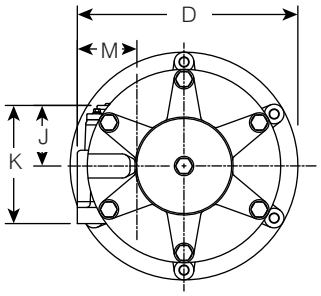

Notes: 1. Shown without pointer for clarity.
2. For mounting dimensions, refer to pages 10 - 11.

Dimensions (inches), Double Acting

Model	A	B	C1	C2	D	E	F	G	H	J	K	L	M	P1	P2	Q
1485DA	77.15	38.58	13.50 Sq.	13.50 Sq.	21.57	33.44	–	0.56	–	7.96	15.30	–	7.58	1/2	1/2	2.12
1935DA	77.77	38.58	13.50 Sq.	17.00 Sq.	22.08	33.07	–	1.18	–	7.96	15.30	–	7.58	1/2	3/4	3.28
2385DA	78.39	39.20	17.00 Sq.	17.00 Sq.	22.08	32.69	–	1.18	–	7.96	15.30	–	7.58	3/4	3/4	2.67
3071DA	79.41	40.22	17.00 Sq.	24.62 Dia.	25.90	32.00	–	4.98	–	7.96	15.30	–	7.58	3/4	1	3.00
3731DA	80.44	40.22	24.62 Dia.	24.62 Dia.	25.90	31.32	–	4.98	–	7.96	15.30	–	7.58	1	1	3.00
4534DA	81.19	40.97	24.62 Dia.	29.00 Dia.	28.08	30.82	–	7.16	–	7.96	15.30	–	7.58	1	1	5.52
5336DA	81.94	40.97	29.00 Dia.	29.00 Dia.	28.08	30.32	–	7.16	–	7.96	15.30	–	7.58	1	1	5.52
6044DA	101.38	51.20	29.00 Dia.	24.62 Dia.	28.08	40.91	–	4.70	–	7.96	15.30	–	7.58	1	1	5.52
7114DA	102.40	51.20	29.00 Dia.	29.00 Dia.	28.08	40.41	–	4.70	–	7.96	15.30	–	7.58	1	1	5.52

Dimensions (inches), Spring Return

Model	A	B	C1	C2	D	E	F	G	H	J	K	L	M	P1	P2	Q
1485SR	93.49	38.58	13.50 Sq.	13.50 Sq.	21.57	32.57	–	0.56	–	7.96	15.30	–	7.58	1/2	1/2	2.12
1934SR	94.11	39.20	17.00 Sq.	13.50 Sq.	22.08	32.20	–	1.18	–	7.96	15.30	–	7.58	3/4	1/2	2.12
1935SR	94.11	38.58	13.50 Sq.	17.00 Sq.	22.08	31.98	–	1.18	–	7.96	15.30	–	7.58	1/2	3/4	2.50
2385SR	94.70	39.20	17.00 Sq.	17.00 Sq.	22.08	31.61	–	1.18	–	7.96	15.30	–	7.58	3/4	3/4	2.50
3071SR	95.72	40.22	24.62 Dia.	17.00 Sq.	25.90	30.92	–	4.98	–	7.96	15.30	–	7.58	1	3/4	3.33
3072SR	100.40	39.20	17.00 Sq.	24.62 Dia.	25.90	30.95	–	4.98	–	7.96	15.30	–	7.58	3/4	1	4.71
3731SR	101.43	40.22	24.62 Dia.	24.62 Dia.	25.90	30.27	–	4.98	–	7.96	15.30	–	7.58	1	1	4.71
4534SR	102.18	40.97	29.00 Dia.	24.62 Dia.	28.08	29.77	–	7.16	–	7.96	15.30	–	7.58	1	1	5.52
5336SR	107.24	40.97	29.00 Dia.	29.00 Dia.	28.08	29.27	–	7.16	–	7.96	15.30	–	7.58	1	1	5.52
6044SR	132.71	51.20	29.00 Dia.	24.62 Dia.	28.08	38.86	–	4.70	–	7.96	15.30	–	7.58	1	1	4.71
7114SR	138.41	51.20	29.00 Dia.	29.00 Dia.	28.08	39.15	–	4.70	–	7.96	15.30	–	7.58	1	1	5.52

Copyright © 2011 Tyco Flow Control. All rights reserved.

Series B and C Mounting Details

Models 006 and 015 – Top and bottom of housing (symmetrical) ISO 5211-F07

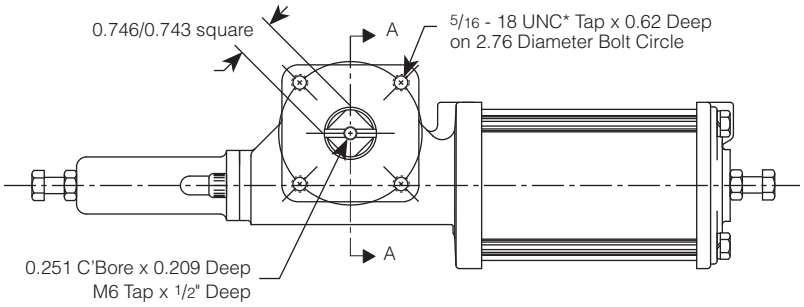

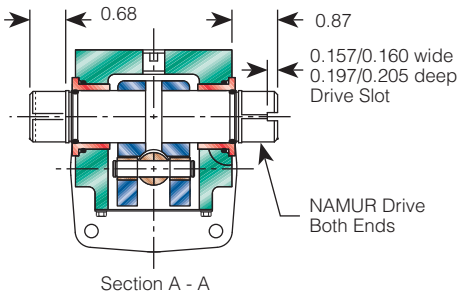

Models 023 through 100 – Top and bottom of housing (symmetrical) ISO 5211-F12

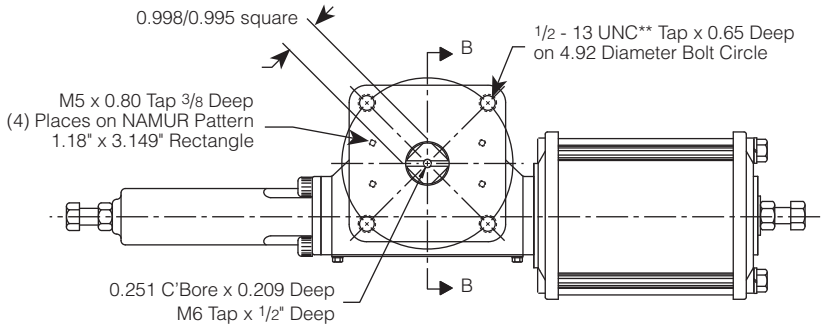

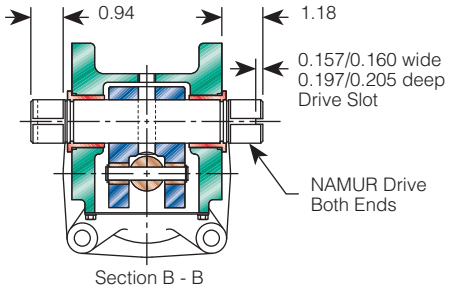

Models 135, 210, 270, 344, 345 and 420 – Bottom of housing ISO 5211-F16

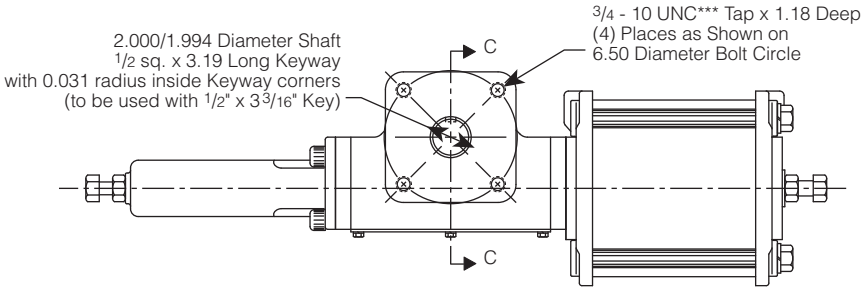

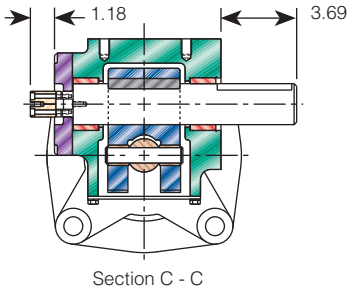

Models 135, 210, 270, 344, 345 and 420 – Top of housing – Mounting details

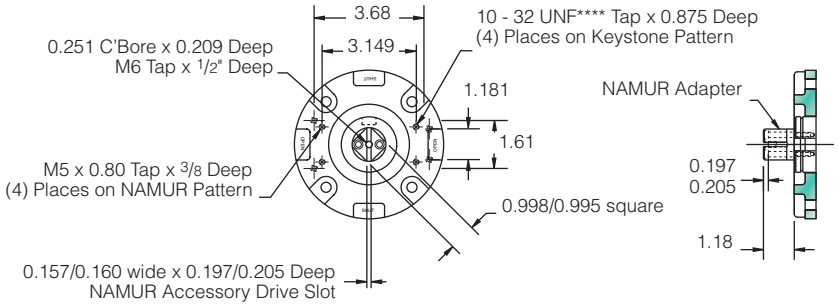

Metric thread option

Metric Tap	Model Number
*M8	006 and 015
**M12	023 to 100
***M20	135 to 1150
****M5	135 to 1150

Replace "U" with "M" in order number designation (refer to page 6).

Copyright © 2011 Tyco Flow Control. All rights reserved.

Series B and C Mounting Details

Models 370, 575, 740, 944, 945 and 1150 – Bottom of housing ISO 5211-F30

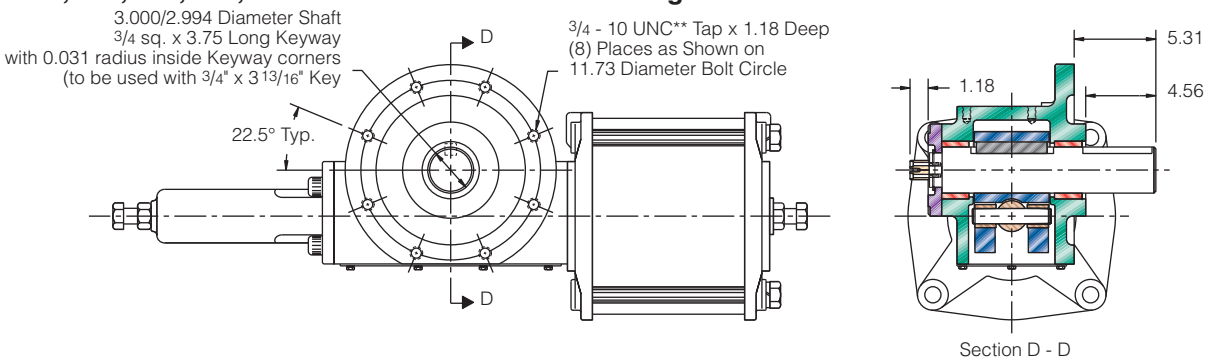

Models 370, 575, 740, 944, 945 and 1150 – Top of housing _ Mounting details

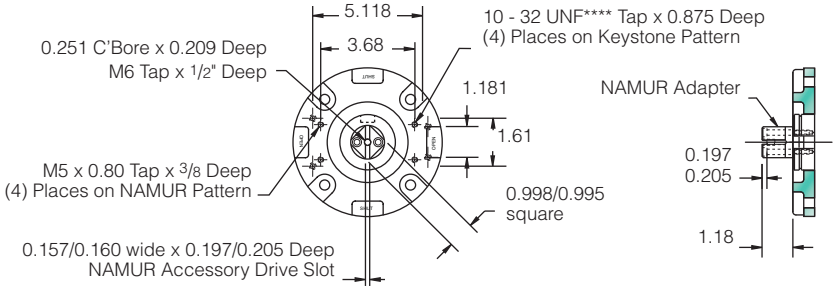

Models 1485, 1934, 1935, 2385, 3071, 3072, 3731, 4534 and 5336 – Bottom of housing ISO 5211-F35

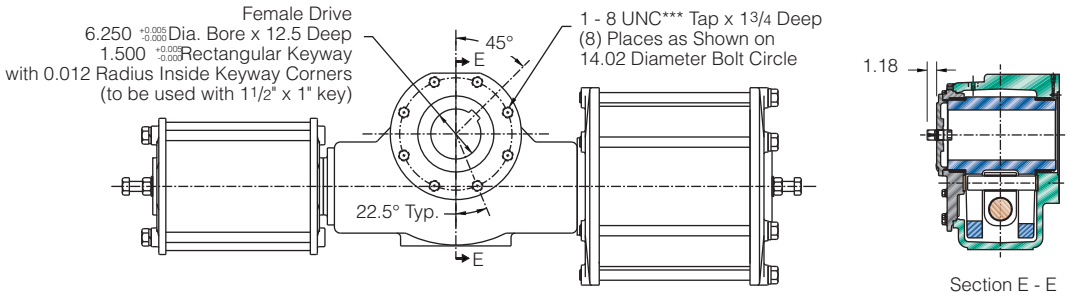

Models 6044 and 7114 – Bottom of housing ISO 5211-F48

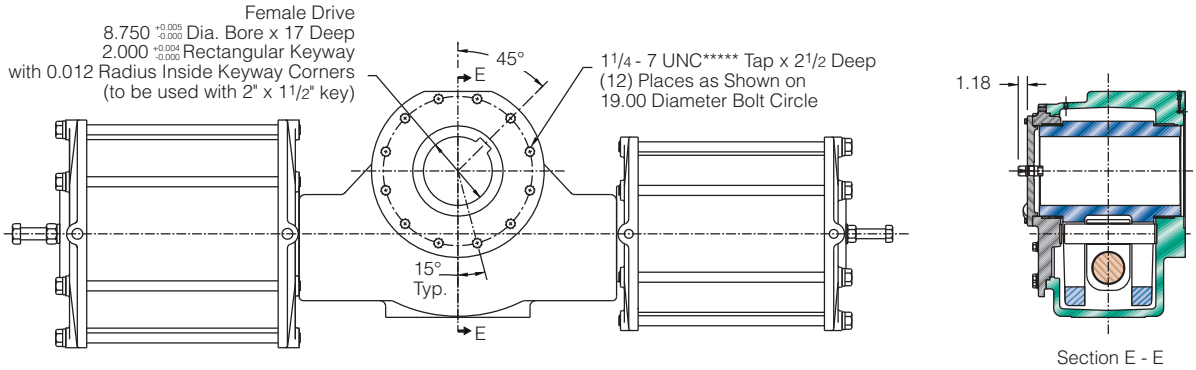

Models 1485, 1934, 1935, 2385, 3071, 3072, 3731, 4534, 5336, 6044 and 7114 – Top of housing – Mounting details

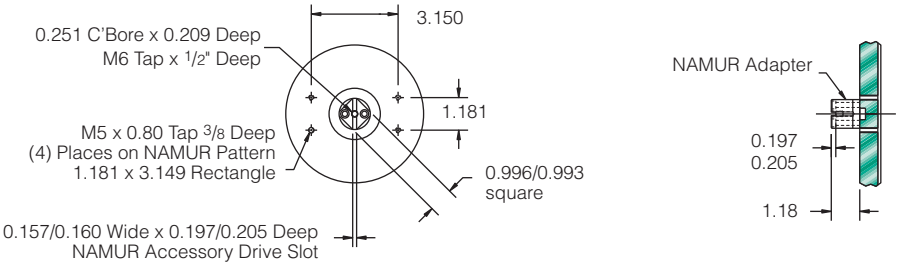

Metric thread option

Metric Tap	Model Number
**M20	370 and 575 to 1150
***M30	1485 to 5336
****M5	370 and 575 to 1150
*****M36	6044 and 7114

Replace "U" with "M" in order number designation (refer to page 6).

Copyright © 2011 Tyco Flow Control. All rights reserved.

Also Available

The Series S Actuator (All Stainless)

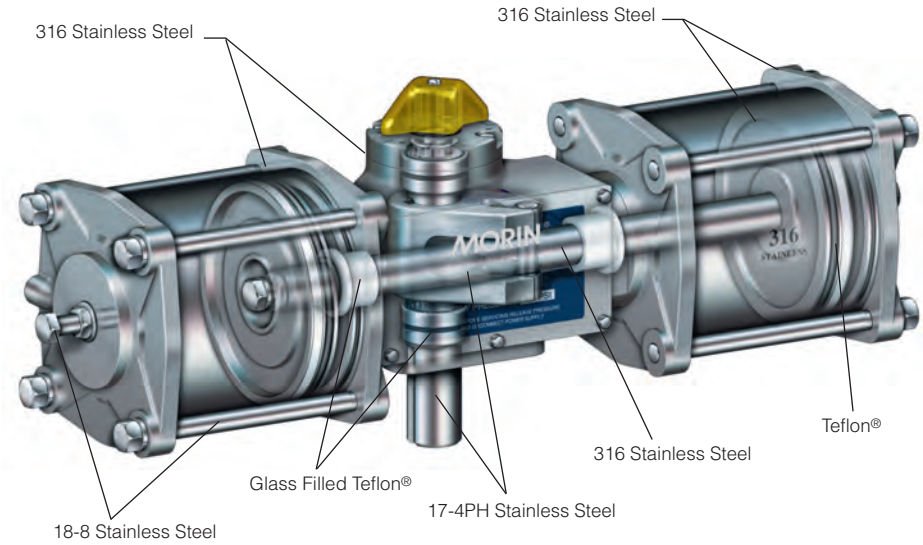

Setting an unrivaled standard in actuation at a price unexpectedly low for stainless steel.

- Up To 160 psig max operating pressure (see torque chart, MORMC-0333).
- Double acting break torques to 240,000 lb.in.
- Spring end torques to 104,125 lb.in.

For additional information, refer to datasheet MORMC-0024.

The Series HP Actuator

High pressure actuation with carbon steel cylinders for superior corrosion resistance.

- Up To 2250 psi max operating pressure (see torque chart, MORMC-0333).
- Double acting torques to 800,000 lb.in.
- Spring end torques to 400,000 lb.in.

For additional information, refer to datasheet MORMC-0072.

Tyco Flow Control (TFC) provides the information herein in good faith but makes no representation as to its comprehensiveness or accuracy. This data sheet is intended only as a guide to TFC products and services. Individuals using this data sheet must exercise their independent judgment in evaluating product selection and determining product appropriateness for their particular purpose and system requirements. TFC MAKES NO REPRESENTATIONS OR WARRANTIES, EITHER EXPRESS OR IMPLIED, INCLUDING WITHOUT LIMITATION ANY WARRANTIES OF MERCHANTABILITY OR FITNESS FOR A PARTICULAR PURPOSE WITH RESPECT TO THE INFORMATION SET FORTH HEREIN OR THE PRODUCT(S) TO WHICH THE INFORMATION REFERS. ACCORDINGLY, TFC WILL NOT BE RESPONSIBLE FOR DAMAGES (OF ANY KIND OR NATURE, INCLUDING INCIDENTAL, DIRECT, INDIRECT, OR CONSEQUENTIAL DAMAGES) RESULTING FROM THE USE OF OR RELIANCE UPON THIS INFORMATION. Patents and Patents Pending in the U.S. and foreign countries. Tyco reserves the right to change product designs and specifications without notice. All registered trademarks are the property of their respective owners. Printed in the USA.

Copyright © 2011 Tyco Flow Control. All rights reserved.