ITT

CONOFLOW
REGULATORS & CONTROLS

P.O. Box 768
St. George, S. C. 29477-0768
(803) 563-9281 TELEX 4945706

WARNING

Conoflow's products are designed and manufactured using materials and workmanship required to meet all applicable industry standards. The use of these products should be confined to services specified and/or recommended in the Conoflow catalogs, instructions or by Conoflow application engineers (i.e. exceeding pressure-temperature rating or using device for services other than those specified).

To avoid personal injury or equipment damage due to misuse or misapplication of a product, it is necessary to select the proper materials of construction and pressure-temperature ratings which are consistent with performance requirements.

R&C

FOREMOST IN CONTROL ELEMENTS

INSTRUCTIONS
Model GVB12
Snap-Acting Relay

OPERATION

The pressure at which the relays will actuate can be adjusted to any point between 25 PSI(172 kPa) and 85 PSI(586 kPa) by turning adjusting knob (1). To raise the pressure setting, turn adjusting knob (1) clockwise. Supply or pilot pressure (introduced at Port S) acting on the upper diaphragm subassembly (3) overcomes the force of the spring (15) in the bonnet (14) and permits air to flow into the lower chamber. This pressure build-up forces the spring-loaded spool valve (23) to open common Ports "A" and "B" allowing flow through Ports "B" and "B1". When the pressure drops below the preset point, the exhaust port opens and common Ports "A" and "A1" are switched from "B" and "B1" to "C" and "C1" by releasing the spring-loaded spool valve (23).

The spool valve (23) will return to its original position ("A" and "A1" to "B" and "B1") when the pressure to the pilot is approximately 20 % greater than the setpoint. For example, if the set pressure is 50 PSI(345 kPa), the unit will return to its original position when the pressure to the pilot builds up to approximately 60 PSI(414 kPa).

INSTALLATION

Sensing Port is 1/8" N.P.T. All other connections are 1/4" N.P.T. Unit is factory adjusted to activate when pressure to Port S falls below 40 PSI(276 kPa). It can be mounted in any position.

MAINTENANCE

Under normal operating conditions, no maintenance is necessary. If required, diaphragm subassembly (3) and diaphragm (20) can be replaced by removing the four capscrews (27) holding bonnet (14) to body (17).

ORDERING INSTRUCTIONS

When ordering replacements and spare parts, specify complete model no., item no. and description. This will permit positive identification and rapid handling of order.

DIMENSIONS

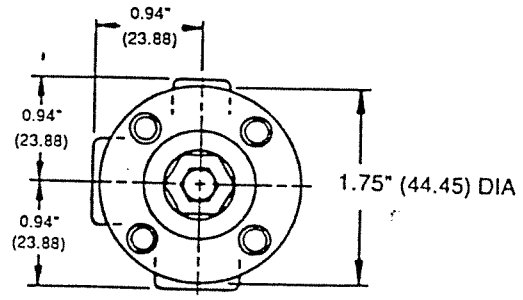

TOP VIEW, GVB12

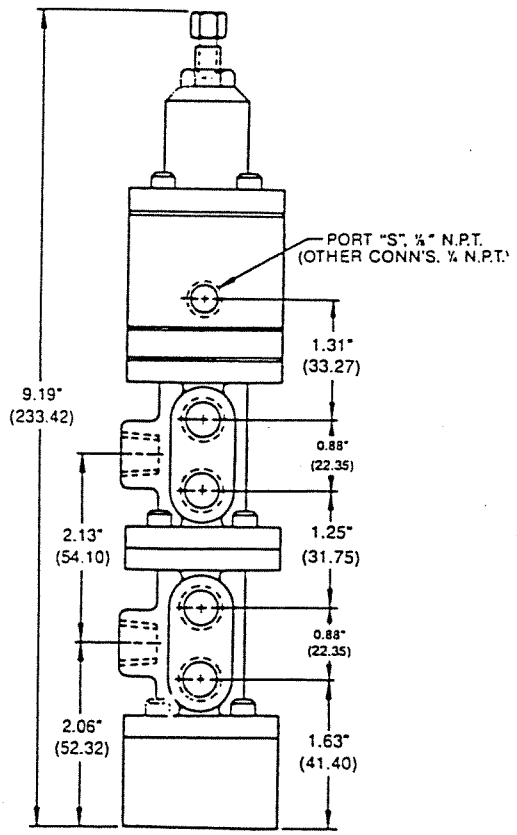

NOTE: FOR CERTIFIED DIMENSIONAL DRAWING, REFER TO A29-1.

PRINTED IN U.S.A.
DATE: 10/91 - Rev. A

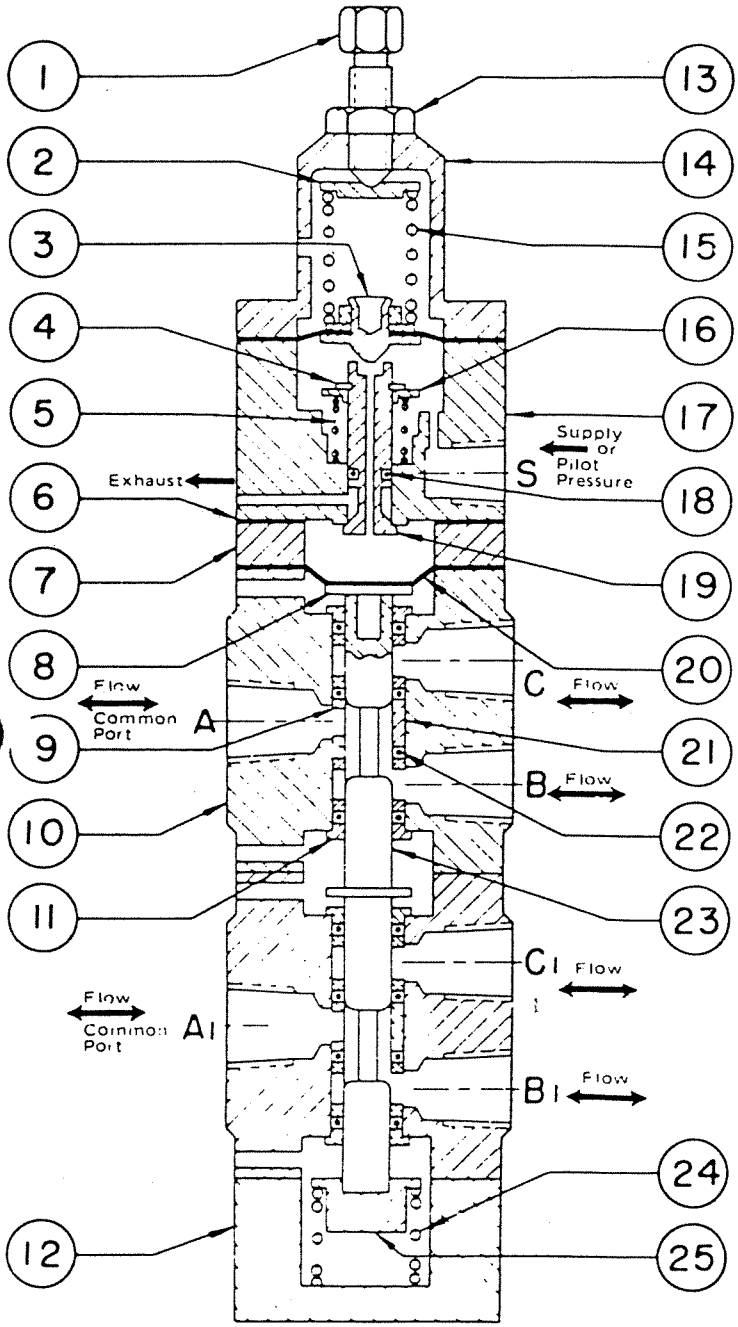

Item No.	No. Req'd.	Description	Part No.
1	1	Adjusting Knob	6017750
2	1	Spring Button	6005789
3[1]	1	Diaphragm Subassembly Consisting of: Diaphragm, Seat, Seat Nut, Washer	6006092
4	1	Truarc Ring	6076376
5	1	Plug Spring	6019962
6[1]	1	Gasket	6026215
7	1	Spacer	6005771
8	2	Spool Cap	6005821
9	4	"O" Ring Spacer	6005854
10	2	Body	6005912
11	4	"O" Ring Retainer	6005847
12	1	Cap	6005938
13	1	Nut 3/16" - 24 N.F.	6900212
14	1	Bonnet	6005763
15	1	Zero and Suppression Spring	6025811
16	1	Spring Retaining Plate	6005797
17	1	Body	6005748
18[1]	1	"O" Ring	6076574
19	1	Plug	6005755
20[1]	1	Diaphragm	6025852
21	2	"O" Ring Spacer	6005862
22[1]	8	"O" Ring	6076608
23	2	Spool	6005839
24	1	Spring	6026009
25	1	Spring Button	6005920
26	8	Capscrew (Not Shown) 10-32 N.F. x 1/2" Lg.	6900176
27	4	Capscrew (Not Shown) 10-32 N.F. x 2 1/4" Lg.	6900168

Note: 1. Recommended Spare Parts can be purchased individually or as a spare parts kit, under number 6385320. Spare Parts Kit — GVB12. Consists of Items 3, 6, 18, 20 and 22.

ITT
CONOFLOW
REGULATORS & CONTROLS

P.O. Box 768
St. George, S. C. 29477-0768
(803) 563-9281 TELEX 4945706

WARNING: **MANUFACTURED WITH (1, 1, 1-TRICHLOROETHANE), A SUBSTANCE WHICH HARMS PUBLIC HEALTH AND ENVIRONMENT BY DESTROYING OZONE IN THE UPPER ATMOSPHERE.**