KEYSTONE

Spring Return and Double Acting Pneumatic Quarter-Turn Actuators For Output Torques to 27,624 lb.in.

Features and Benefits

- Compact rack and pinion design utilizes the whole piston area to develop output torque.
- Pistons with integral rack drive reduce the number of dynamic seals, minimizing air leakage.
- Double pistons nullify sideloads on the pinion shaft, minimizing bearing wear and extending life.
- Internal air porting eliminates external tubing.
- Hard anodized aluminum body with external electrostatic powder coating (ESPC) finish protects against corrosive environments.
- Female output drive enables direct mounting of most Keystone valves, eliminating special adaptation connections and assuring correct alignment.
- Bottom entry pinion shaft simplifies assembly and provides anti-blowout feature.
- Anti-friction piston pads ensure no metal-to-metal contact, providing smooth operation. Ideal for modulating or on/off control applications.
- Adjustable travel stops standard in both directions on sizes 065 to 181.
- An extensive range of standard accessories are available for direct mounting.

  - Solenoid valves
  - Limit switchboxes
  - Positioners
  - Declutchable manual override gearbox
  - High visibility indicator

General Applications

For remote control of any quarter-turn application, including ball, butterfly or rotary plug valves, dampers, etc.

Technical Data

Max. Supply Pressure:	150 psig
Rated Supply Pressure:	120 psig
Double Acting Torque:	27,624 lb.in. @ 120 psig
Spring End Torque:	10,155 lb.in. @ 100 psig
Temperature Range:	-4°F to 200°F [-20°C to 90°C]
Optional Temperature Ranges Available:	-15°F to 300°F [-26°C to 150°C] -40°F to160°F [-40°C to 71°C]

tyco Flow Control

Keystone is either a trademark or registered trademark of Tyco International Services AG or its affiliates in the United States and/or other countries. All other brand names, product names, or trademarks belong to their respective holders.

Copyright © 2009 Tyco Flow Control. All rights reserved.

Double Acting Pneumatic Quarter-Turn Actuator

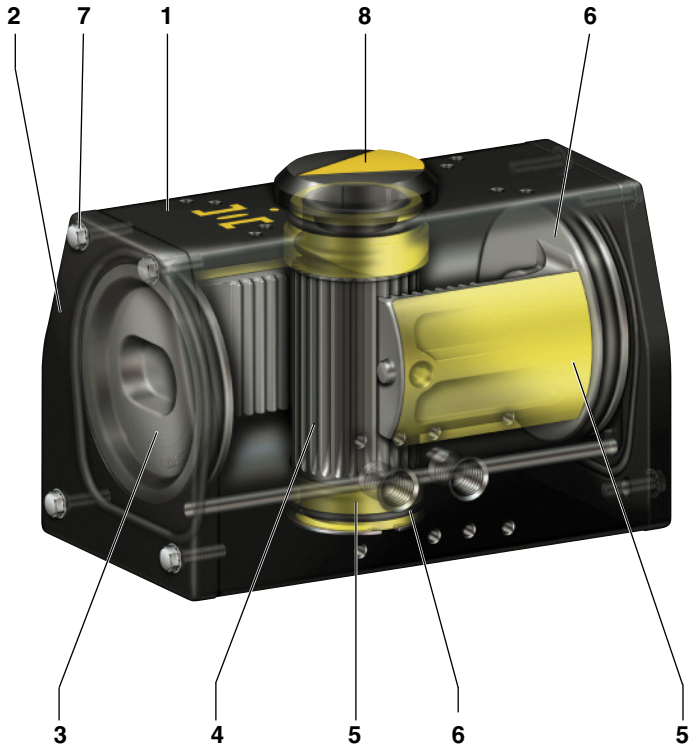

Spring Return Pneumatic Quarter-Turn Actuator

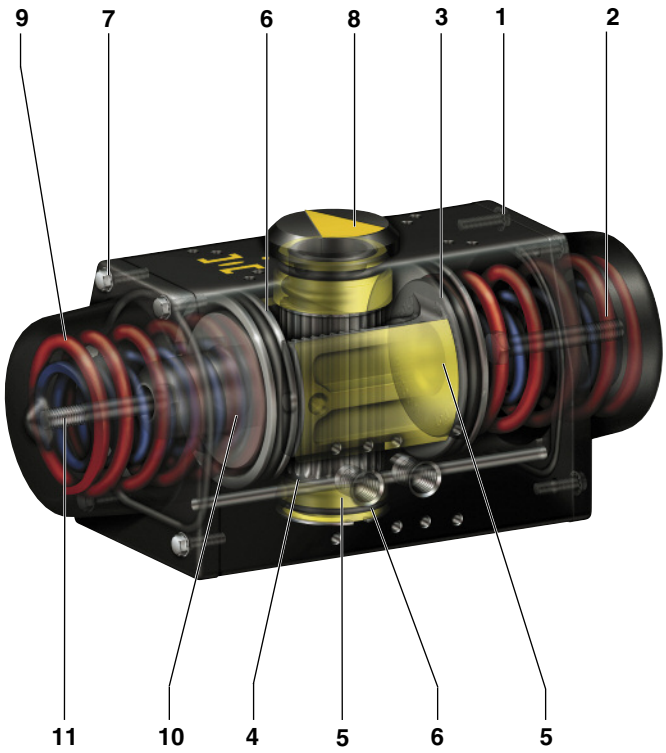

Materials of Construction

Part		Material	US Material Standard	UK Material Standard	DIN Material Standard
1	Body	Extruded aluminum (hard anodized and ESPC*)	ASTM B221	BS1474 6063	DIN 3.33206.51
2	End cap	Die-cast aluminum LM6 or LM24 (ESPC*)	ASTM B85	BS1490	DIN 1725 - 230 or 226
3	Piston (003 only) Piston (006-181)	Glass filled nylon 66 Die-cast aluminum (anodized) LM6 or LM24	ASTM B85	BS1490	DIN 1725 - 230 or 226
4	Pinion shaft	Carbon steel (sealbond - N coated)	ASTM A108	BS970 080M40	C40
5	Bearings	Engineered polymer			
6	O-rings	Nitrile			
7	Fasteners	304 stainless steel	ASTM A193	BS970 Part 3 - 304/305	DIN 267 Part 3
8	Indicator	ABS			
9	Spring	Spring steel (ESPC*)	ASTM A401	BS5216 HS3	DIN 17223 Pti
10	Spring Cone	Die-cast aluminum LM6	ASTM B85	BS1490	DIN 1725
11	Spring retaining bolt	Steel (plated)	ASTM A193	BS970 Part 3 - 304/305	DIN 267 Part 3

* electrostatic powder coating

Copyright © 2009 Tyco Flow Control. All rights reserved.

Notes

1. Operating times under no load for air pressures from 40 psig to 100 psig. (Times based on actual measurements.)
2. Total time is defined as time required from switching solenoid valve to completion of 90 degree stroke.
3. Stroke times can be increased or decreased dramatically by using speed controls, oversized pilot valves or quick-exhaust valves.
4. Air Consumption:
   Cubic inches shown in chart represent actual free air volume in either open or close direction. Air consumption will vary depending on supply pressure. To determine standard cubic feet per minute use the following formula:

Double Acting SCFM =

$$\left(\frac{\text{Open + Close Vol. in}^3}{1728}\right)\left(\frac{\text{Supply Air psig + 14.7}}{14.7}\right)\left(\text{Cycles/Min}\right)$$

Spring Return SCFM =

$$\left(\frac{\text{Air Stroke Vol. in}^3}{1728}\right)\left(\frac{\text{Supply Air psig +14.7}}{14.7}\right)\left(\text{Cycles/Min}\right)$$

Example: Calculate SCFM for size 036 double acting using 80 psig air supply and 5 cycles/minute.

Double Acting SCFM =

$$\left(\frac{119 + 83}{1728}\right)\left(\frac{80 + 14.7}{14.7}\right)\left(5\right)\text{SCFM} = 3.77$$

5. All Double Acting Actuator operating times are based on using a standard Tyco 5/2 solenoid valve with nominal $.7C_V$.
6. All Spring Return Actuator operating times are based on using a standard Tyco 3/2 solenoid valve with nominal $.4C_V$.

Double Acting Actuator Operating Times (seconds)

Actuator Size	Stroke Time	Total Time
003	0.16	0.24
006	0.26	0.37
012	0.45	0.64
024	0.90	1.22
036	1.32	1.76
065/066	3.60	5.10
090/091	4.50	6.30
180/181	5.90	7.90

Spring Return Actuator Operating Times (seconds)

Actuator Size	Stroke Time		Total Time	
	Air	Spring	Air	Spring
003S	0.30	0.35	0.40	0.42
006S	0.50	0.50	0.52	0.54
012S	0.63	0.68	1.00	1.10
024S	1.40	1.60	2.10	2.30
036S	2.10	2.20	2.60	2.90
065S/066S	3.60	4.50	4.80	5.80
090S/091S	8.70	5.20	9.50	6.30
180S/181S	12.60	10.75	12.90	11.20

Actuator Piston Displacement (in^3)

Actuator Size	Open-Double Acting Air Stroke - Spring Return	Close - Double Acting
003	11	8
006	21	14
012	38	28
024	79	56
036	119	83
065/066	215	161
090/091	292	204
180/181	591	409

Actuator Weight (lb.)

Actuator Size	Double Acting	Spring Return
003	2.7	3.3
006	5.7	7.9
012	7.7	12.5
024	16.7	26.0
036	27.0	38.0
065/066	41.9	75.0
090/091	63.9	99.2
180/181	99.2	158.7

Copyright © 2009 Tyco Flow Control. All rights reserved.

Size 003

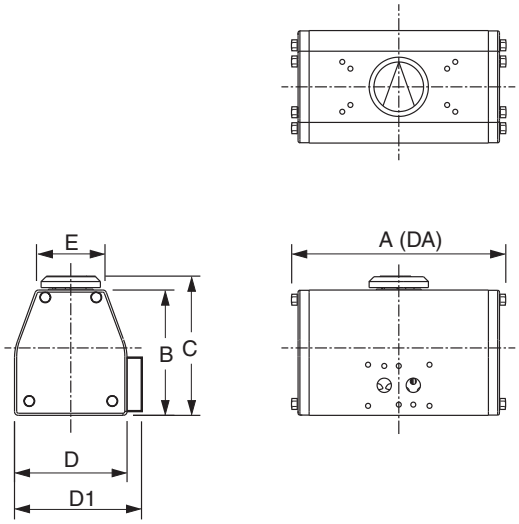

Size 003S

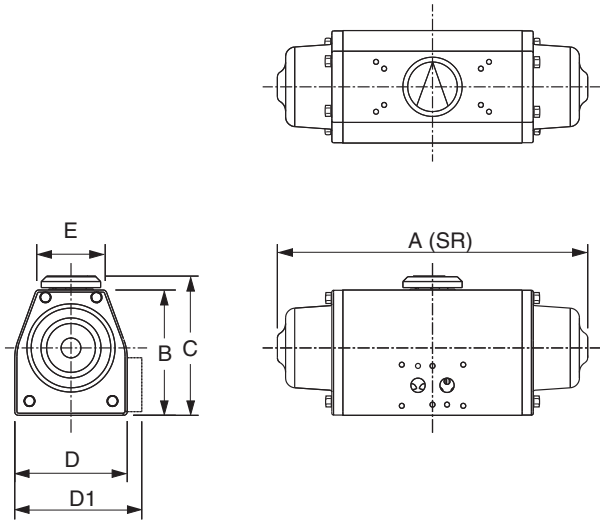

Size 006-036

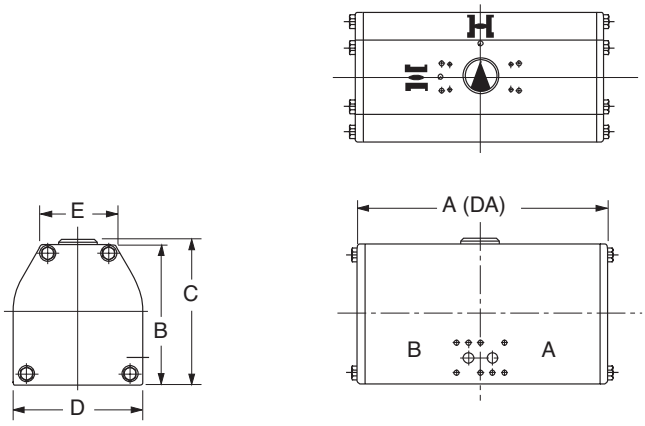

Size 006S-036S

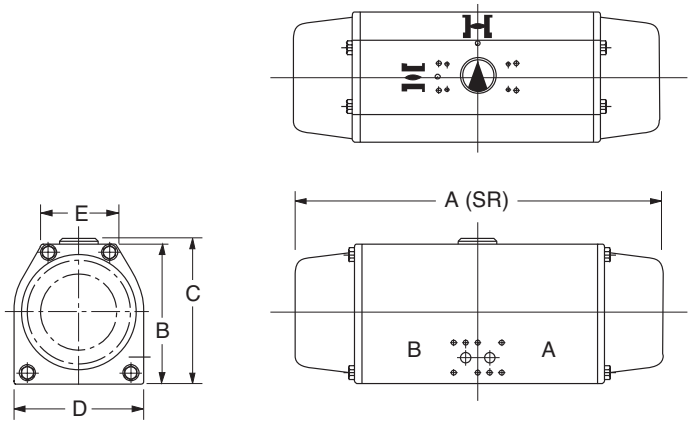

Size 065-181

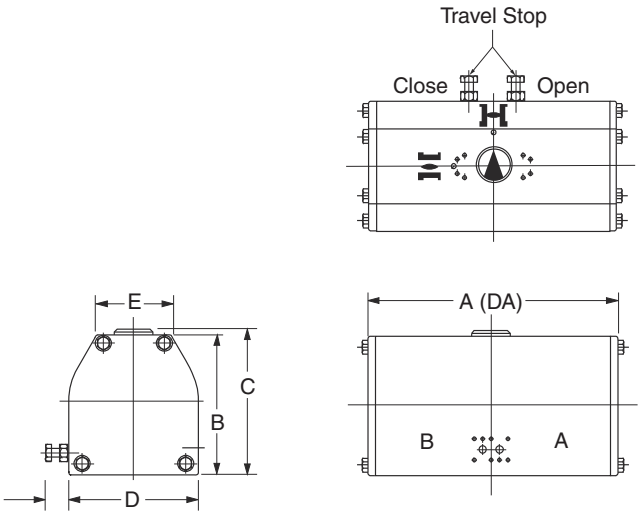

1.38 Max.
recommended

Size 065S-181S

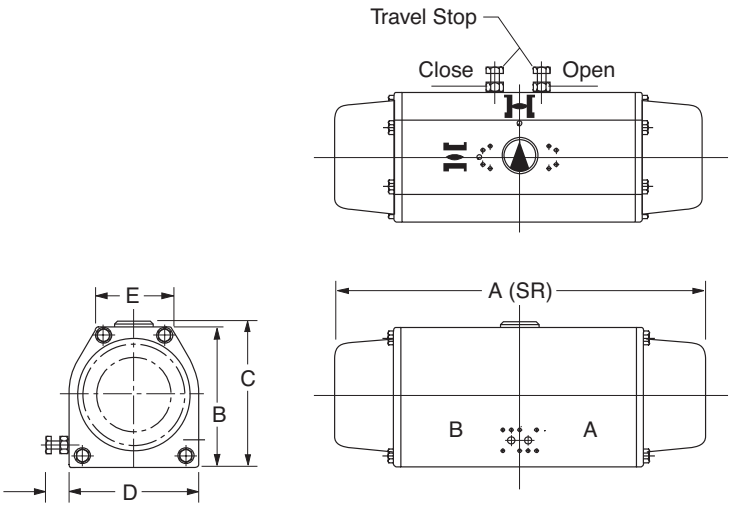

1.38 Max.
recommended

Copyright © 2009 Tyco Flow Control. All rights reserved.

General Information

A. A comprehensive range of adaptors are available to suit all Tyco valve stems.

B. Actuators can be mounted parallel or perpendicular to valve flow.

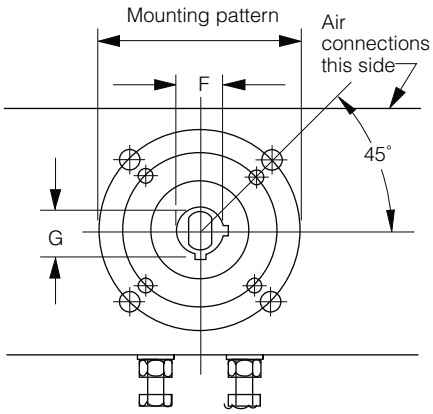

Sizes 065 to 181

C. On sizes 065 to 181, the total travel of 100 degrees allows for end-of-travel adjustment of 5 degrees over and 7 degrees under at both open and close positions.

D. Travel stop bolts (when present) must not be used for manual override.

E. Mounting pattern with 5.00 PCD is only available on 180/181 size with the use of a 0.75 thick mounting plate.

Notes

Each body has both types of accessory mounting pads.

1. Tyco standard mounting pad
2. NAMUR mounting pad

Actuator Dimensions (inches)

Actuator Size	A(SR)	A(DA)	B	C	D	D1	E
003	8.23	5.57	3.19	3.54	3.27	3.58	2.20
006	10.10	6.55	4.08	4.41	3.66	–	2.26
012	11.10	7.13	5.00	5.35	4.38	–	3.25
024	13.82	9.17	5.90	6.26	5.35	–	3.35
036	16.69	10.72	6.87	7.24	6.00	–	3.50
065/066	19.69	12.78	8.55	8.90	8.00	–	4.50
090/091	23.00	16.08	8.55	8.90	8.00	–	4.50
180/181	27.32	18.94	10.55	10.90	9.84	–	5.12

Mounting Dimensions (inches) - 79U

Actuator Size	Shaft Bore F	Keyway Size G	Keyway Size Width	Key Size	Mounting Patterns PCD	Mounting Patterns Mounting Holes
003	0.814 Dia.	0.855	0.189	3/16 Sq.	1.75	4 x 1/4-20UNC x 0.38 Dp.
006/012	1.004 Dia.	1.060	0.252	1/4 x 3/16	3.25	4 x 3/8-16UNC x 0.56 Dp.
024/036	1.128 Dia.	1.250	0.252	1/4 Sq.	3.25 5.00	4 x 3/8-16UNC x 0.56 Dp. 4 x 1/2-13UNC x 0.63 Dp.
065	1.128 Dia.	1.250	0.252	1/4 Sq.	5.00	4 x 1/2-13UNC x 0.63 Dp.
066	1.380 Dia.	1.523	0.315	5/16 Sq.	5.00	4 x 1/2-13UNC x 0.63 Dp.
090	1.628 Dia.	1.808	0.378	3/8 Sq.	5.00 6.50	4 x 1/2-13UNC x 0.63 Dp. 4 x 3/4-10UNC x 1.00 Dp.
091	1.882 Dia.	2.058	0.504	1/2 x 3/8	5.00 6.50	4 x 1/2-13UNC x 0.63 Dp. 4 x 3/4-10UNC x 1.00 Dp.
180	1.882 Dia.	2.058	0.504	1/2 x 3/8	5.00 6.50	4 x 1/2-13UNC x 0.63 Dp.[3] 4 x 3/4-10UNC x 1.00 Dp.
181	2.257 Dia.	2.437	0.504	1/2 x 3/8	5.00 6.50	4 x 1/2-13UNC x 0.63 Dp.[3] 4 x 3/4-10UNC x 1.00 Dp.

Accessory Drillings to Actuator Body (inches)

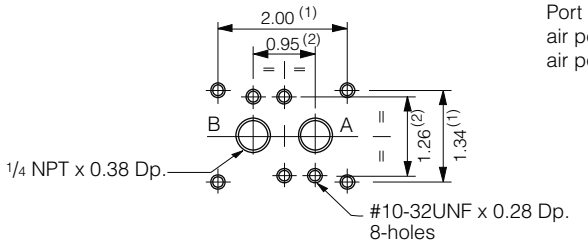

Port Hole Drillings
air port "B" - CLOSED
air port "A" - OPEN

* On sizes 180/181 drillings are aligned vertically (not horizontally as shown) with Port A at top.

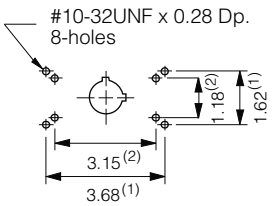

Top mounting drilling sizes 003 to 036

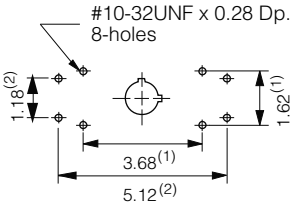

Top mounting drilling sizes 065 to 181

Actuator Shaft Top Detail (inches)

Size	Shaft Bore
003	0.814 Dia. x 0.855 x 0.189 Keyway (3/16 Sq. Key)
006/012	1.004 Dia. x 1.060 x 0.252 Keyway (1/4 x 3/16 Key)
024/036/065/066/090/091/180/181	1.128 Dia. x 1.250 x 0.252 Keyway (1/4 Sq. Key)

Copyright © 2009 Tyco Flow Control. All rights reserved.

Output Torques (lb.in.) for Single Acting (spring return) Actuators

Actuator Size	Spring Rating (psig)	Spring End	Spring Start	Air Torque	Air Supply in psig 40	50	60	80	100	120
003S	40	62	104	Start	81	123	165	250	334	418
				End	39	81	123	208	292	376
	60	100	162	Start			127	212	296	380
				End			65	150	234	318
	80	137	221	Start				175	259	343
				End				91	175	259
	100	174	279	Start					222	306
				End					117	201
006S	40	123	200	Start	151	232	312	474	635	796
				End	74	155	235	397	558	719
	60	197	312	Start			238	400	561	722
				End			123	285	446	607
	80	272	425	Start				325	486	647
				End				172	333	494
	100	346	538	Start					412	573
				End					220	381
012S	40	245	395	Start	288	445	601	915	1228	1542
				End	138	295	451	765	1078	1392
	60	391	616	Start			455	769	1082	1396
				End			230	544	857	1171
	80	536	836	Start				624	937	1251
				End				324	637	951
	100	709	1058	Start					764	1078
				End					415	729
024S	40	482	783	Start	583	896	1209	1835	2462	3088
				End	282	595	908	1534	2161	2787
	60	771	1221	Start			920	1546	2173	2799
				End			470	1096	1723	2349
	80	1059	1660	Start				1258	1885	2511
				End				657	1284	1910
	100	1347	2098	Start					1597	2223
				End					846	1472
036S	40	718	1149	Start	874	1342	1810	2746	3882	4618
				End	443	911	1379	2315	3251	4187
	60	1149	1794	Start			1379	2315	3251	4187
				End			734	1670	2606	3542
	80	1579	2438	Start				1885	2821	3757
				End				1026	1962	2898
	100	2006	3083	Start					2392	3328
				End					1317	2253
065S/066S	40	1395	2896	Start	1681	2586	3491	5300	7109	8919
				End	813	1718	2623	4432	6241	8051
	60	2226	3530	Start			2660	4469	6278	8088
				End			1356	3165	4974	6784
	80	3059	4578	Start				3636	5445	7255
				End				2117	3926	5736
	100	3892	6064	Start					4612	6422
				End					2440	4250
090S/091S	40	1772	2874	Start	2135	3284	4433	6731	9029	—
				End	1033	2182	3331	5629	7927	—
	60	2827	4484	Start			3378	5676	7974	—
				End			1721	4019	6317	8615
	80	3885	6093	Start				4618	6916	9214
				End				2410	4708	7006
	100	4943	7703	Start					5858	8156
				End					3098	5396
180S/181S	40	3637	5905	Start	4389	6750	9111	13833	18554	23276
				End	2122	4482	6843	11565	16286	21008
	60	5810	9212	Start			6938	11660	16381	21103
				End			3537	8258	12980	17701
	80	7983	12518	Start				9487	14209	18930
				End				4952	9673	14395
	100	10155	15825	Start					12036	16758
				End					6367	11008

Copyright © 2009 Tyco Flow Control. All rights reserved.

Output Torques (lb.in.) for Double Acting (air-to-air) Actuators

Actuator Size	Air Supply in psig					
	40	50	60	80	100	120
003	156	198	240	325	409	493
006	298	379	459	621	782	943
012	580	737	893	1207	1520	1834
024	1159	1472	1785	2411	3038	3664
036	1732	2200	2668	3604	4540	5476
065/066	3347	4252	5157	6966	8775	10585
090/091	4252	5401	6550	8848	11146	13444
180/181	8736	11097	13458	18180	22902	27624

Westlock Controls - Accessories

Quantum Rotary Control Monitors*

764/784/864, Weathertight
765/789/865, Non-incendive
711/722/811, Intrinsically Safe
777/877/360, Explosionproof

Quantum products offer a fully integrated solution for the monitoring and control of process valves. Combining sensors, Falcon low-powered solenoids, junction housings and a local visual position indicator in one compact unit suitable for weatherproof and hazardous location service, Westlock offers an extremely efficient and cost effective method for the monitoring and controlling of rotary valves.

AccuTrak™ Rotary Position Monitors*

1040/2004 and 9358/9044, Rotary Position Monitors, Weathertight
K-Switch, 9468, Rotary Position Monitor, Non-incendive
5004/5044 and 5050, Rotary Position Monitors, Intrinsically Safe
360, 2007 and 9479, Rotary Position Monitors, Explosionproof

The AccuTrak™ family of products offers an integrated solution for the monitoring of process valves. By combining sensors, junction housings and local visual position indication in one compact unit suitable for weatherproof and hazardous location service, Westlock offers an extremely efficient and cost effective method of both monitoring and controlling linear and rotary valves.

* ***Stainless Steel, AccuTrak, Quantum, Intellis Network Solutions and Positioners*** - please consult your sales representative for the availability of global certifications such as ATEX, IEC, GOST, CSA and InMetro for specific configurations in these product lines, as approvals may vary.

Copyright © 2009 Tyco Flow Control. All rights reserved.

Westlock Controls - Accessories (continued)

Positioners*

ICoT 5200/5300, Intelligent SmartCal Positioners
ICoT 5400, FOUNDATION Fieldbus™ Positioner
EaziCal, Electro-Pneumatic Positioner
793, Pneumatic Positioners

Westlock Controls offers a variety of solutions for the precise positioning of rotary and linear pneumatic actuators. These positioners are suitable for use with either double acting or spring return actuators. Mounting options include the ModMount®, NAMUR standards (VDI/VDE 3845) or actuator special kits. These units also provide the simplest form of installation and calibration as standard, without the requirement for additional equipment. Positioners are available with both HART® and FOUNDATION Fieldbus™ digital communication protocols.

Network Solutions*

Intellis Network Solutions, Control Monitors; Network Accessories

Intellis is a family of industrial control field Network Control Monitors which use embedded control systems to automate valves and link field I/O to the host PLC or DCS. Each monitor is assigned a unique address and accepts input/output signals from valve position sensors, solenoids and external alarm and control devices. Hall Effect sensors are utilized for valve position monitoring. Low-power Falcon solenoid valve provide integrated actuation control. Network interface modules Pacs allow communication via a protocol of choice. Westlock Intellis Network Control Monitors are available for linear or rotary applications in all area classifications.

Intellis Control Monitor

* ***Stainless Steel, AccuTrak, Quantum, Intellis Network Solutions and Positioners*** - please consult your sales representative for the availability of global certifications such as ATEX, IEC, GOST, CSA and InMetro for specific configurations in these product lines, as approvals may vary.

Tyco Flow Control (TFC) provides the information herein in good faith but makes no representation as to its comprehensiveness or accuracy. This data sheet is intended only as a guide to TFC products and services. Individuals using this data sheet must exercise their independent judgment in evaluating product selection and determining product appropriateness for their particular purpose and system requirements. TFC MAKES NO REPRESENTATIONS OR WARRANTIES, EITHER EXPRESS OR IMPLIED, INCLUDING WITHOUT LIMITATION ANY WARRANTIES OF MERCHANTABILITY OR FITNESS FOR A PARTICULAR PURPOSE WITH RESPECT TO THE INFORMATION SET FORTH HEREIN OR THE PRODUCT(S) TO WHICH THE INFORMATION REFERS. ACCORDINGLY, TFC WILL NOT BE RESPONSIBLE FOR DAMAGES (OF ANY KIND OR NATURE, INCLUDING INCIDENTAL, DIRECT, INDIRECT, OR CONSEQUENTIAL DAMAGES) RESULTING FROM THE USE OF OR RELIANCE UPON THIS INFORMATION. Patents and Patents Pending in the U.S. and foreign countries. Tyco reserves the right to change product designs and specifications without notice. All registered trademarks are the property of their respective owners. Printed in the USA.

Copyright © 2009 Tyco Flow Control. All rights reserved.