DUO-CHEK®

brands you trust.

DUO-CHEK® High Performance
Non-Slam Check Valves

CRANE®
Energy Flow Solutions

www.craneenergy.com

Key Features and Typical Applications

Key Features & Benefits

❶ Dual-plate designs that are compact and lightweight for efficient seating, operation and lower installation cost

❷ Independent springs with long legs to prevent seat scrubbing and provide non-slam performance

❸ Retainerless valve design without body penetration for critical service applications

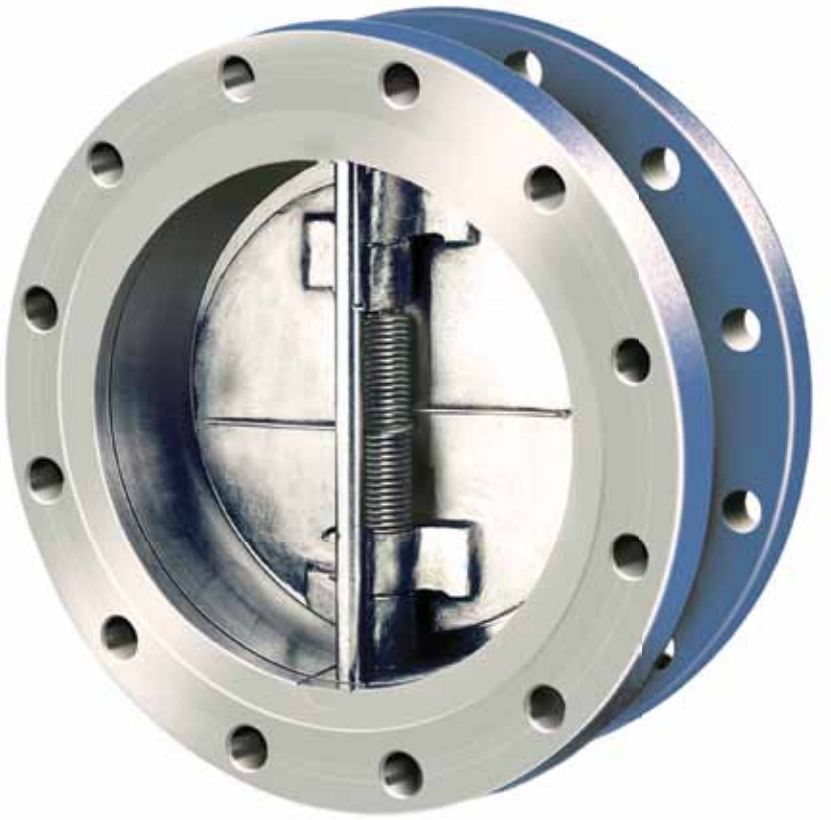

Double Flanged (Retainerless)

Typical Applications

- Petroleum Refining
- Oil and Gas Production
- Chemicals and Petrochemicals
- Power Generation
- Steel/Primary Metals
- Marine
- Water and Wastewater
- Pulp and Paper

Duo-Chek® The High Performance Non-Slam Check Valve

Duo-Chek® high performance non-slam check valves are the original Mission Manufacturing Company wafer check valves introduced to the market in the late 50's. The valve is available in the sizes, pressure classes and configurations required to meet the most demanding of applications. Product range includes, but is not limited to:

- Sizes: 2" to 88"
- ASME Pressure Class 125 through 2500
- API 6A and 6D pressure classes
- DIN, JIS, BS, AS, and ISO standards are also available
- Wafer, lug, double flanged and extended body styles
- Wafer configurations available in retainered and retainerless style
- Body Materials:
  Cast Iron, Carbon Steel, Stainless Steels, Duplex Stainless Steel, Super Duplex
- Resilient Seat Materials:
  EPDM, Buna-N, Neoprene, and Viton-B®
- Integral and overlaid metal seats also available
- End Connections:
  Raised Face, Plain Face, Ring Joint, Weld-End, Hub-End

Industry Standards*	
API 594	Valve Design
API 598	Valve Pressure Testing and Inspection
ASME B16.5 & B16.47	Flanges
ASME B16.34	Pressure/Temperature Ratings
API 6D	Pipeline Valves
API 6A	Production Valves
(PED) 97/23/EC	Pressure Equipment Directive

*Consult factory for other specification requirements.

Viton® is a registered trademark of DuPont Performance Elastomers L.L.C.

Spring action closes plates independently. (6" and larger)

Long-leg spring action allows plates to open and close without seat scrubbing.

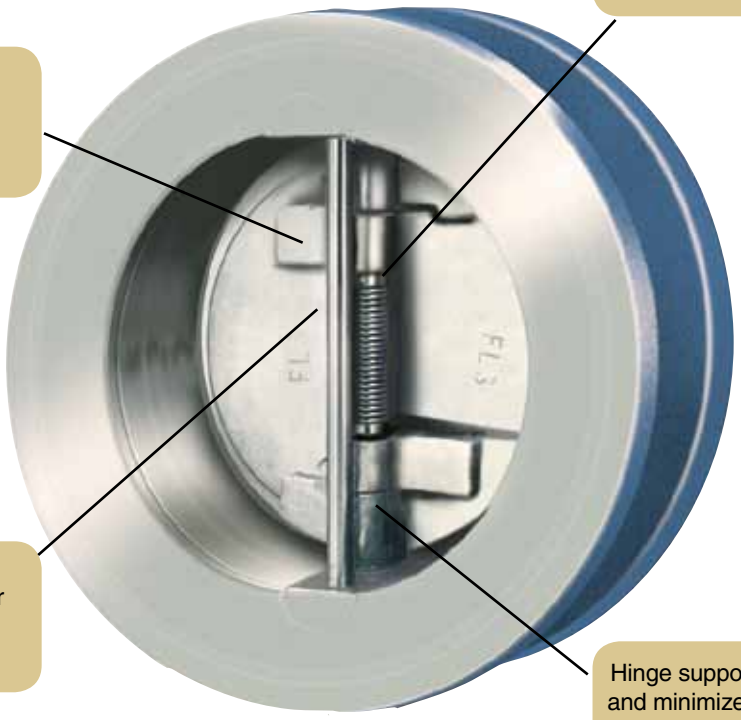

Dual plate lightweight design for efficient seating and operation.

Hinge support sleeve reduces friction and minimizes water hammer through independent plate suspension (on larger sizes).

Wafer Style H (Retainerless)

DUO-CHEK®

Specify Duo-Chek® ...to your Advantage

Leading engineers specify Duo-Chek® for check valve applications because it provides high performance. Extensive research and testing with demonstrated performance has earned worldwide recognition, unmatched in the industry.

The Duo-Chek® wafer valve design is generally stronger, lighter, smaller, more efficient and less expensive than conventional swing check valves. Its design meets API 594 which is approximately one fourth the face to face dimension and 15% to 20% the weight, on most popular sizes, making them less expensive than a swing check valve. It is much easier to install between standard gaskets and line flanges. The savings compound during installation due to ease of handling and only one set of flange studs is required. Therefore, it is more cost effective to install, and also to maintain.

The Duo-Chek® also offers special design features that make it a high performance non-slam check valve. These include a scrub-free opening, and in most sizes a unique independent spring design as well as an independent plate support system. These features may not be found in other check valves. Other configurations offered include lug, double flange and extended body.

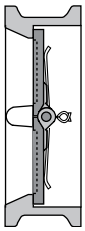

Plates in closed position. Top view.

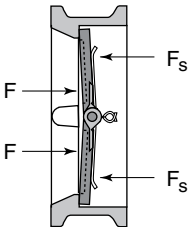

Heel opens first as flow begins.

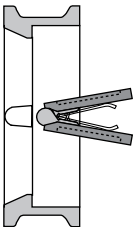

Plates fully opened (85°)

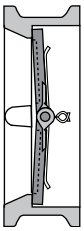

Plate toe closes first as flow decreases.

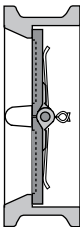

Plates fully seated for bubble-tight shutoff.

The innovative dual-plate design of the Duo-Chek® employs two spring-loaded plates (disc halves) suspended on a central vertical hinge pin. As flow begins, the plates open in response to a resultant force (F) which acts as the center of the sealed surface area. The contact point of the reacting spring leg's force (Fs) acts beyond the center of the plate area, causing the heel to open first. This prevents rubbing of the seal surface prior to normal plate opening, eliminating wear.

As the velocity of flow decreases, torsion spring action reacts automatically. This moves the plates closer to the body seats, reducing the distance and time of travel for closure. By having the plates closer to the body seats at the time of flow reversal, the valve dynamic response is greatly accelerated. This dramatically reduces the water hammer effect for non-slam performance.

At closing, the point of spring force causes the toe of the plates to close first. This prevents dragging of the heels of the plates and maintains seal integrity for much longer periods.

Independent Spring Design

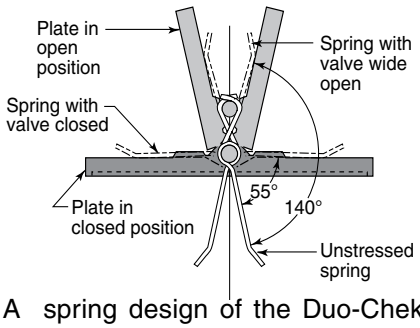

A spring design of the Duo-Chek® (sizes 6" and larger) allows higher torque to be exerted against each plate with independent closing in response to the process stream. Testing has proved this action provides up to 25% improvement in valve life and 50% reduction in water hammer.

Each of the dual plates has its own spring or springs, which provide independent closing action. These independent springs undergo less angular deflection, only 140° as compared to 350° for conventional springs with two legs.

Independent Plate Suspension Design

The Duo-Chek® unique hinge design reduces friction forces by 66%, which improves valve response significantly. Support sleeves are inserted through the outboard hinges so that the upper hinge is independently supported by the lower sleeve during valve operation. This allows both plates to close at the same time for quick response, and excellent dynamic performance.

Design Features

Features	Benefits
Lightweight and Compact Wafer Design	Installs between mating flanges with 10 to 20% the weight of flanged swing checks in popular sizes - **Saves money in initial valve cost and provides lower installation cost.**
Dual Plate, Flat Seat Design	Plate heel is lifted first by design to prevent seat wear. Employs two spring-loaded plates with flat seats - **Gives superior performance and tight shutoff to meet industry standards.**
Independent Spring Action	Maximum deflection of 140°, provides improved valve response and longer life - **Saves money with longer valve life and improved system performance by reducing water hammer.**
Independent Plate Suspension with Unique Hinge Design (larger sizes)	Improves valve response and reduces friction forces by 66% - **Further assurances of non-slam performance with faster valve response.**
Simple, External Body Geometry	Configuration simplifies valve insulation - **Saves money.**
Variety of Body Designs Available Lug and Double Flange	Provides options to suit application needs - **Eases your selection process by utilizing the industry leader as your single source.**
Wide Variety of Materials	Versatility for many services - **Satisfies more application needs.**
Flexibility in Installation Position	Provides more rigidity than pipe, eliminating concerns of pipe bending loads of flanged valves - **Safety against thermal or seismic catastrophes.**
Body Strength and Rigidity	Some sizes suitable for horizontal or vertical up positions - **Simplifies piping design, eliminates constraints that swing checks create.**
Retainerless Duo-Chek® Design Eliminates Body Penetrations	For critical service applications, prevents possible escape of unwanted and/or hazardous materials to atmosphere - **Provides safety in critical services by eliminating environmental concerns. Standards in Lug and Double Flange Designs.**
Vertical Hinged Design	In horizontal position flow allows plates to function freely and full open under lower flow conditions as compared to swing check - **Reduces pressure loss, improves dynamic response and eliminates valve chatter.**
Special Valves Meet Market Needs: • **Special Lined** • **Hub Ends** • **Weld Ends** • **PED Certified (CE)** • **Low Temperature Applications - Cryogenic** • **ABS Certified** • **CRN Registration**	Wide size range, pressure range and added options allow further market needs to be met - **Reliance on world's largest wafer check line to supply more needs.**

Applications

A wide variety of body designs, materials, and trim make Duo-Chek® valves exceptionally versatile and suitable for a multitude of liquid and gas fluid applications.

Some of the major markets and typical applications are depicted here.

Oil and Gas Production
Centrifugal Compressor Discharge
Fire Water Lines
Oil/Steam Separation
Steam and CO_2 Injection
Gas/Oil Gathering Systems
Flowlines
Wellheads
Regasification
Liquidfaction

Power Generation
Steam
Condensate
Boiler Feed Pumps
Cooling Towers
Service Water Recirculators
River Water Intake

Petroleum Refining
Hydrogen
Cracking
Steam
Crude Oil
Gasoline
Visbreakers
Naphtha
Sulfur

Petrochemicals
Ethylene
Propylene
Steam
Reboilers
Gases

Chemicals
Chlorine
Phosgene
Aromatics
Polymers
Acids
Air Separation
Caustics

Applications

Water and Wastewater
Distribution Lines
Pumping Stations
Sewage Plant Blower Discharge
Chemical Treatment
Fire Protection Systems
HVAC Systems
Desalination

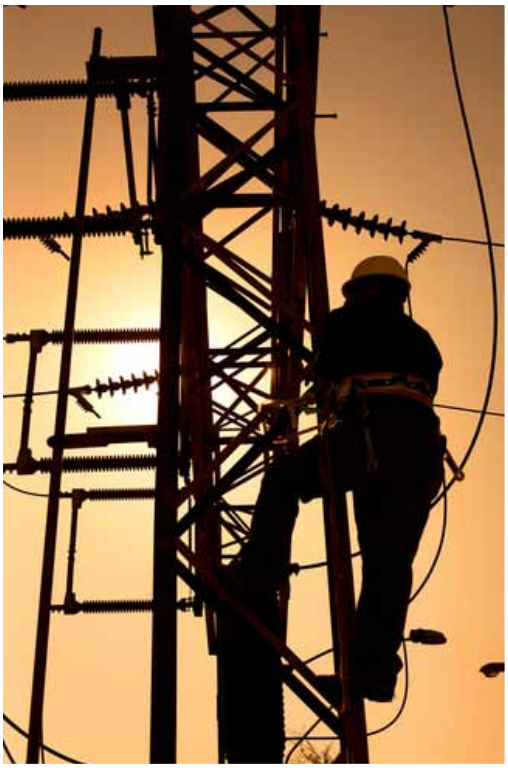

Steel/Primary Metals
Quench Lines
De-Scaling
Continuous Casters
Steam
Condensate
Strippers
Electro-Galvanizing

Pulp and Paper
Bleaching Lines
Black Liquor
Green Liquor
White Water
Steam
Chemical Recovery

Marine
Oil Tankers
Tanker Loading Terminals
Offshore Platforms
Sub-Sea Manifolds
Terminal Transfer Lines
Barge Unloading Lines
Shipboard Services

Valve Configurations

Style G
Retainered Wafer
Sizes 2" – 88"
- ASME Classes 125 – 2500
- Retainered Wafer Design
- Dimensions pages 13–14

Style H
Retainerless Wafer
Sizes 2" – 88"
- ASME Classes 150 – 2500
- Dimensions pages 13–14

Retainerless Wafer Double Flange Valves
Sizes 8" – 88"
- ASME Classes 150 – 900
- Sizes & Dimensions page 15

Retainerless Wafer Lug Valves
Sizes 2" – 24"
- ASME Classes 150 – 2500
- Sizes & Dimensions page 16

Style X
Extended Body Wafer
Sizes 10" – 54"
- ASME Classes 150 – 2500
- Designed for extremely fast opening conditions
- Sizes & Dimensions page 17

Specials

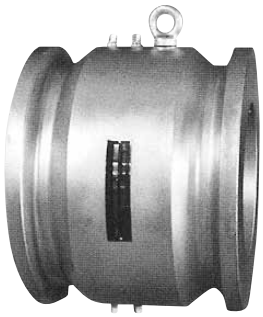

Hub End Valves

Valves with Hub ends may be furnished for use with hub end, clamp-style connections. These end connections simplify installation procedures in systems that utilize them. Please contact your sales office for information regarding sizes and pressure ratings available, and other hub end connections such as Spolock, Seaboard Lloyd, etc.

Butt Weld Valves

Valves with butt weld ends may be furnished for piping systems designed for welded system components to eliminate potential joint leak paths. See Ordering Information for proper figure number designation, so that weld-end preparations match the mating pipe schedules.

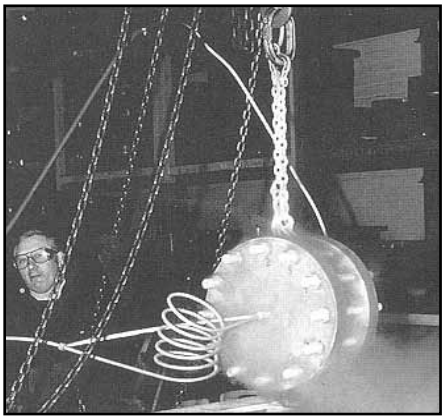

Cryogenic Valves

Duo-Chek® valves may be furnished for subatmospheric to cryogenic temperatures -58°F through -321°F(-50°C through -196°C). Special materials of construction such as low temperature alloy steels, austenitic stainless steel, aluminum bronze or Monel® are generally required.

Coated & Lined Valves

Duo-Chek® valves may be furnished with linings, when specified, for abrasion or corrosion resistance. Linings include Natural Rubber, Neoprene, and others. All body surfaces of lined valves are covered with the specified material, eliminating the need for gaskets. Hinge and stop pin holes are encapsulated to seal them against line fluids.

Solid alloy valves are recommended for extremely corrosive applications. A variety of coatings may be provided on request to resist corrosion or abrasion. Some of the commonly specified coatings include epoxies, coal tar derivatives and sacrificial zinc primers. Please discuss your requirements with your sales office.

Other Specials

Other Duo-Chek® specials furnished include:

- Valves to comply with NACE MR0103
- Valves cleaned for liquid oxygen (LOX) service
- Valves prepared for Food Service (austenitic stainless steel)
- Special testing for valves, including radiography, magnetic particle, dye penetrant, ultrasonic, helium leak, etc.

Monel® is a registered trademark of Special Metals Corporation.

Ordering Information

Figure Number System

Size	Style	Pressure Class	Body & Plate	Seal	End Connection	Body Configuration		Modification Number
24"	H	15	S	P	F	3	-	9

DESCRIPTION: 24" Style H, ASME Class 150, Carbon Steel Body, Metal Seal, raised face flanges, with double flange body, (modification number indicates Inconel® X spring)

Valve Size

Nominal valve sizes are expressed in inches or millimeters.

In Inches:
For use with ASME, API and B and A Flange Standards.

In Millimeters:
For use with DIN, or JIS rated valves (size preceded by "M" for DIN, or "J" for JIS).

Style

Ordering Letter	Body Type	Size Range
H	Retainerless Duo-Chek® Design Wafer, Lug or Double Flange	2" through 88" (50mm through 2200mm)
G	Wafer, Retainered	2" through 88" (50mm through 2200mm)
X	Extended Body Design	10" through 54" (150mm through 1350mm)
W*	Bodies with Integral Weld-Ends	2" through 72" (50mm through 1800mm)

*Weld-end valves also require the additional designation of the pipe schedule they are designed to fit.

Pressure Classes

ASME		API[Δ]		DIN / JIS[1]		BS / AS[2]	
Ordering No.	Class	Ordering No.	Class	Ordering No.	PN Rating	Ordering No.	Table
12	125	21	2000	Flange Standard:	6		
15	150				10	B - BS	A
25	250	31	3000	M - DIN	16		thru
30	300				25	A - AS	T
40	400	51	5000	J - JIS	40		
60	600				64		
90	900	101	10000		100		
150	1500				160		
250	2500	151	15000		250		
450	4500				320		

Δ API Class is shown in psig, cold working pressure.
1 Metric valves with DIN or JIS standard flanges are designated by having the nominal size expressed in millimeters, preceded by "M" or "J". Flange ratings in PN numbers are then listed after the valve style, as in ASME or API Valves.

Example: **M 100 (4") G16 SPF -9**

Flange Standard (M - DIN) (J - JIS) 100mm Size

Pressure Rating, PN for DIN or JIS (in bars)

This specifies a metric valve, designed to fit between DIN flanges. Nominal size is 100 millimeters (corresponding to 4"), Style G Duo-Chek® with a pressure rating of 16 bars, carbon steel body and plate, metal seat, raised face end connections and Inconel® X spring.

2 Valves designed for use with British Standard 10 or Australian Standard 2129 are defined by adding two letters between the style of construction and pressure rating. First letter designates the standard, and the second letter denotes the table in that standard.

Example: **6" G B E 15 BNF**

Flange Standard B - British Std. 10 A - Std. 2129

ASME Class is made from

Table in corresponding Standard

Figure number lists a 6" Style G Duo-Chek®, designed to fit between British Standard 10, Table E Flanges, using a Class 150 Valve, having an aluminum bronze body and plates, Neoprene seal and raised face end connections.

Ordering Information

Body and Plates

Ordering Letter	Material	Specification	Ordering Letter	Material	Specification
BA	Ni-Aluminum Bronze	ASTM B148, Alloy 958	T	317 S.S.	ASTM A351, Gr. CG-8M
C	316 Stainless Steel	ASTM A351, Gr. CF-8M	U	WC6 Alloy Steel	ASTM A217, Gr. WC6 (1¼% Cr)
F	Alloy 20	ASTM A351, Gr. CN7M	V	347 S.S.	ASTM A351, Gr. CF-8C
H	Cast Iron with Al. Br. Plates	ASTM A126, class 40 ASTM B148, (952)	Y	C5 Alloy Steel	ASTM A217, Gr. C5 (5% Cr)
K	Hastelloy® C	A494, Gr. CW12MW	DZ	22% Duplex	ASTM A995, Gr. 4A
L	C12 Alloy Steel	ASTM A217, Gr. C12 (9% Cr)	EA	254 SMO Stainless	UNS S31254, (ASTM CK3MCuN)
M	Monel®	ASTM A494, Gr. M30C	GC	LCC Low Temp. Steel	ASTM A352, Gr. LCC
S	Carbon Steel	ASTM A216, Gr. WCB	TT	Titanium	ASTM B367, Gr. C2
			EB	25% Super Duplex	ASTM A995, Gr 6A

Hastelloy® C is a registered trademark of Haynes International, Inc.

Seal[1]

Ordering Letter	Material	Operating Temperature °C	Operating Temperature °F
A	EPDM	-18 to 121	0 to 250
M	Buna-N	-30 to 121	-22 to 250
N	Neoprene	-40 to 121	-40 to 250
P	As Body	-196 to 538	-321 to 1000
V	Viton-B®	-12 to 210	-10 to 410

Spring Selection Guide[2]

Spring Material	Operating Temperature °C	Operating Temperature °F
Type 316 S.S.	-129 to 120	-200 to 250
Inconel® X-750	-250 to 537	-420 to 1000

1 This range of operating temperatures is for general guidance. The range varies with application, body and plate material.
2 For unique service conditions other spring materials are available. Please consult factory.

End Connections

Ordering Letter	Connections
F	Serrated face
G	Hub End
P	Plain Face (non serrated, Class 125)
R	Ring Joint
W	Weld-End

Special Body Configurations

Designation No.	Configuration
None (Blank)	Wafer Style, inserted between mating flanges with studs spanning entire length
1	Lug design w/threaded holes bolted from each end
2	Lug design with through-bolt holes to protect studs
3	Double flanged design with valve flanges bolted to individual line flanges

Common Modifications

Mod No.	Material Description	API Trim No.*	Trim Description
-9	Inconel® X-750 Springs		
-14	316 S.S. Plate, Pins		
-39	410 S.S. Plate, Pins & Inconel® X-750 Springs		
-169	410 S.S. Plate, Pins, Inconel® X-750 Springs and 410 S.S. Overlay Seat	1	Type 410 S.S.
-201	316 S.S. Plate, Pins, Inconel® X-750 Springs		
-233	316 S.S. Plate, Pins, Inconel® X-750 Springs and 316 S.S. Overlay Seat	10	Type 316 S.S.
-491	Hard Face Plate, 316 SS, Pins, Inconel® X-750 Springs and Hard Face Seat	5	Hard Faced Seats
-559	Inconel® X-750 Spring and conformance to NACE MR0103		
-772	Monel® Plate, Pins, Springs, Bearings and Monel® Overlay Seat	9	Monel®
131E	410 S. S. Plate, pins, Inconel X-750 Springs and Hard Face Seat	8	F6 and Hard Faced
385E	316 S.S. Plate, Pins, Inconel X-750 Springs and Hard Face Seat	12	316 and Hard Faced

*Steel and steel alloy based metals.
NACE MR0103 compliance offered on metal seated valves only.

Style H†
High Performance Check Valve for Critical Applications

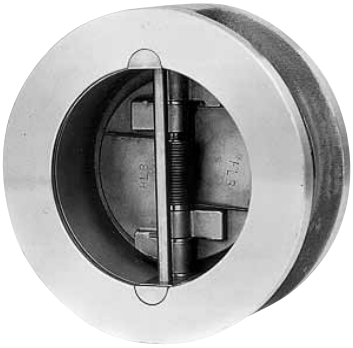

For critical applications, Duo-Chek® Retainerless Check valves Style H feature a one-piece body with no pin retainer penetration through the body.

These high performance valves utilize the same internal design of other Duo-Chek® valves with all the unique features and advantages built into them. The photo shown is a wafer valve however, designs apply to wafer, lug and double flange.

Item No.	Part No.
1	Body
2	Plate
3	Seal
4	Stop Pin
5	Hinge Pin
6	Spring*
7	Pin Insert
8	Snap Ring
9	Body Bearing
10	Plate Bearing
11	Spring Bearing

* Independent spring in valve sizes 6" and larger.

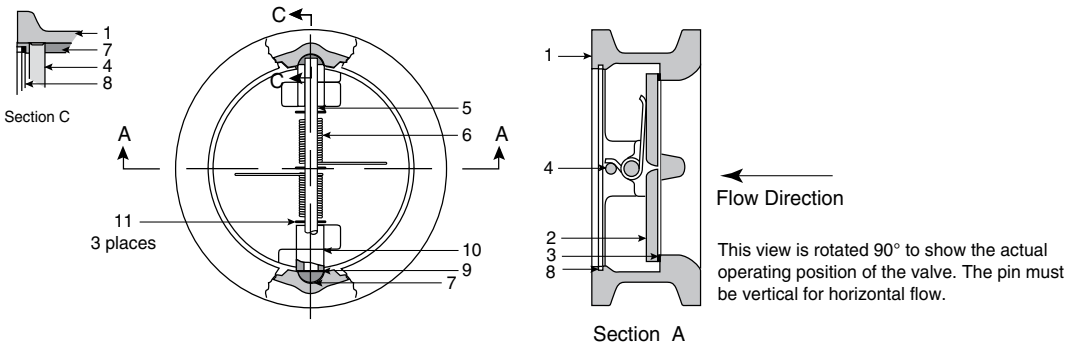

Because Duo-Chek® Retainerless Check valves have no body penetrations, potential leak paths through the valve are eliminated. This makes the Retainerless Check ideally suited to meet the following critical service applications:

- Hydrocarbon processing
- Chemical processing
- Any industry concerned with fire hazards or environmental safety

Key features of the Duo-Chek® Retainerless Check valve Style H include:

- A wide selection of body and plate materials
- A choice of metal-to-metal or resilient sealing
- A full range of pressure classes and sizes
- A variety of end connections
- Designs available include wafer, lug and double flange
- Internals easily removed for field replacement under normal inspections and maintenance procedures

The advanced design of the Duo-Chek® provides many operational benefits to the user, which combined with its more compact size and lower weight, make the Duo-Chek® Retainerless Check valve Style H an excellent alternative to a standard swing check valve.

Remarkable advantages include:

- Independent spring action (on 6" and larger) and plate suspension on larger valves
- Free release flat seats
- Springs provide superior response to flow reversal or deceleration
- Minimal water hammer
- Savings in purchase price and installation costs compared to a conventional swing check valve
- Single body design with no body cartridge

† Installation dimensions for these valves are as shown on pages 13-14.

Dimensions

Wafer Styles G (Retainered) and H (Retainerless)

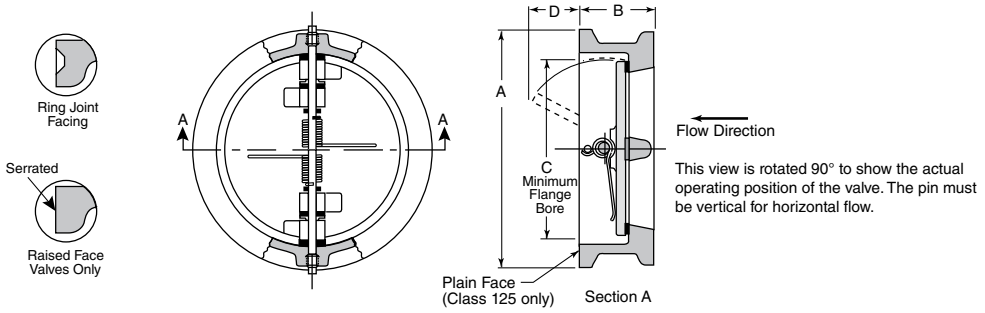

Wafer body valves are designed with flangeless bodies with short face-to-face dimensions per API 594. They are clamped between mating flanges which are connected by studs and nuts.

ASME Class 125 (Cast Iron valves only)

Size		A		B		C		D		Weight	
in	mm	in	mm	in	mm	in	mm	in	mm	lbs.	kg.
2"	50	4 1/8	105	2 1/8	54	2 1/16	52	–	–	4	1.8
2 1/2"	65	4 7/8	124	2 1/8	54	2 15/32	63	–	–	6	2.7
3"	80	5 3/8	137	2 1/4	57	3 1/16	78	5/8	16	7	3.2
4"	100	6 7/8	175	2 1/2	64	4	102	1	25	12	5.4
5"	125	7 3/4	197	2 3/4	70	5	127	1 5/16	33	15	6.8
6"	150	8 3/4	222	3	76	6 1/16	154	1 15/16	35	20	9
8"	200	11	279	3 3/4	95	8	203	3 7/16	54	40	18
10"	250	13 3/8	340	4 1/4	108	10	254	3 3/8	70	65	29
12"	300	16 1/8	410	5 5/8	143	11 15/16	303	3 9/16	83	110	50
14"	350	17 3/4	451	7 1/4	184	12 1/2	318	3 1/16	83	183	83
16"	400	20 1/4	514	7 1/2	191	15	381	4 1/4	113	255	116
18"	450	21 5/8	549	8	203	16 7/8	429	5 3/8	137	315	143
20"	500	23 7/8	606	8 3/8	213	18 13/16	478	6 3/16	160	380	172
24"	600	28 1/4	718	8 3/4	222	22 5/8	575	8 1/4	210	575	261
30"	750	34 3/4	883	12	305	29 1/4	743	9 9/16	229	1070	486
36"	900	41 1/4	1048	14 1/2	368	35	889	12 5/16	303	1962	890
42"	1050	48	1219	17	432	41	1041	15	381	2800	1270
48"	1200	54 1/2	1384	20 5/8	524	47	1194	16 3/4	425	3920	1778
54"	1350	61	1549	21 1/4	540	51 1/2	1308	19 3/4	502	6172	2800
60"	1500	67 1/2	1715	26	660	56	1422	–	–	7800	3538
66"	1650	74 1/4	1886	31	787	65 1/4	1657	–	–	12000	5443
72"	1800	80 3/4	2051	36	914	68	1727	–	–	14000	6350
78"	1950	84	2133	39	991	74	1880	–	–	17160	7800
84"	2100	89 3/4	2280	42	1067	80	2032	–	–	20460	9300
88"	2200	94	2388	44	1118	84	2134	–	–	23100	10500

ASME Class 150

Size		A		B		C		D		Weight	
in	mm	in	mm	in	mm	in	mm	in	mm	lbs.	kg.
2"	50	4 1/8	105	2 3/8	60	1 15/16	49	–	–	6	3
2 1/2"	65	4 7/8	124	2 5/8	67	2 11/32	60	–	–	10	5
3"	80	5 3/8	137	2 7/8	73	2 29/32	74	1/4	6	13	6
4"	100	6 7/8	175	2 7/8	73	3 53/64	97	5/8	16	17	8
5"	125	7 3/4	197	3 3/8	86	4 13/16	122	7/8	22	27	12
6"	150	8 3/4	222	3 7/8	98	5 49/64	146	1 3/8	35	35	16
8"	200	11	279	5	127	7 5/8	194	2 1/8	54	70	32
10"	250	13 3/8	340	5 3/4	146	9 9/16	243	2 3/4	70	106	48
12"	300	16 1/8	410	7 1/8	181	11 3/8	289	3 1/4	83	172	78
14"	350	17 3/4	451	7 1/4	184	12 1/2	318	3 1/4	83	200	91
16"	400	20 1/4	514	7 1/2	191	15	381	4 7/16	113	275	125
18"	450	21 5/8	549	8	203	16 7/8	429	5 3/8	137	315	143
20"	500	23 7/8	606	8 5/8	219	18 13/16	478	6 5/16	160	435	197
24"	600	28 1/4	718	8 3/4	222	22 5/8	575	8 1/4	210	620	281
26"	650	30 1/2	775	14	356	24 1/4	616	8	203	1555	705
30"	750	34 3/4	883	13♦	330♦	29 1/4	743	9	229	1230	558
36"	900	41 1/4	1048	15 1/4♦	3 87♦	35	889	11 15/16	303	2017	915
42"	1050	48	1219	17	432	41	1041	15	381	2800	1270
48"	1200	54 1/2	1384	20 5/8	524	47	1194	16 3/4	425	3920	1778
54"	1350	61	1549	21 1/4	540	51 1/2	1308	19 3/4	502	6172	2800
60"	1500	67 1/2	1715	26	660	56	1422	–	–	7800	3538
66"	1650	74 1/4	1886	31	787	65 1/4	1657	–	–	12000	5443
72"	1800	80 3/4	2051	36	914	68	1727	–	–	14000	6350
78"	1950	84	2133	39	991	74	1880	–	–	17160	7800
84"	2100	89 3/4	2280	42	1067	80	2032	–	–	20460	9300
88"	2200	94	2388	44	1118	84	2134	–	–	23100	10500

Duo-Chek® valves are available in accordance with DIN, BS, JIS, AS and ISO Dimensions. For other sizes and pressure classes contact factory. Class 125 face-to-face dimensions 2-½"-12" are thinner than the requirements of API 594.

♦These G Style valve dimensions do not meet API 594, please consult factory.

Dimensions

Wafer Styles G (Retainered) and H (Retainerless)

ASME Class 250 (Cast Iron valves only)

Size		A		B		C		D		Weight	
in	mm	in	mm	in	mm	in	mm	in	mm	lbs.	kg.
2"	50	4 3/8	111	2 1/8	54	1 15/16	49	3/32	2	5	2.3
2 1/2"	65	5 1/8	130	2 3/8	60	2 11/32	60	3/8	10	11	5
3"	80	5 7/8	149	2 5/8	67	2 29/32	74	9/16	14	11	5
4"	100	7 1/8	181	2 5/8	67	3 53/64	97	9/16	14	14	6.4
5"	125	8 1/2	216	3 1/4	83	4 13/16	122	1	25	29	13.2
6"	150	9 7/8	251	3 3/4	95	5 49/64	146	1 1/2	38	35	16
8"	200	12 1/8	308	5	127	7 5/8	194	2 1/8	54	75	34
10"	250	14 1/4	362	5 1/2	140	9 9/16	243	3 1/16	80	113	51
12"	300	16 5/8	422	7 1/8	181	11 3/8	289	3 1/4	83	174	79
14"	350	19 1/8	486	8 3/4	222	12 1/2	318	3 3/16	81	299	136
16"	400	21 1/4	540	9 1/8	232	14 5/16	364	4 1/8	105	380	172
18"	450	23 1/2	597	10 3/8	264	16 7/8	429	4 13/16	122	510	231
20"	500	25 3/4	654	11 1/2	292	17 15/16	456	5 3/8	136	593	269
24"	600	30 1/2	775	12 1/2	318	21 9/16	548	7 1/16	179	1010	458
30"	750	37 1/2	953	14 1/2	368	28 3/4	730	8 13/16	224	1880	853
36"	900	44	1118	19	483	35	889	11 9/16	294	3573	1608
42"	1050	50 3/4	1289	22 3/8	568	41	1041	14 3/4	375	5780	2622
48"	1200	58 3/4	1492	24 3/4	629	47	1194	16 1/2	419	6572	2981

ASME Class 300

Size		A		B		C		D		Weight	
in	mm	in	mm	in	mm	in	mm	in	mm	lbs.	kg.
2"	50	4 3/8	111	2 3/8	60	1 15/16	49	–	–	7	3
2 1/2"	65	5 1/8	130	2 5/8	67	2 11/32	60	–	–	11	5
3"	80	5 7/8	149	2 7/8	73	2 29/32	74	1/4	6	15	7
4"	100	7 1/8	181	2 7/8	73	3 53/64	97	5/8	16	18	8
5"	125	8 1/2	216	3 3/8	86	4 13/16	122	7/8	22	35	16
6"	150	9 7/8	251	3 7/8	98	5 49/64	146	1 3/8	35	45	20
8"	200	12 1/8	308	5	127	7 5/8	194	2 1/8	54	82	37
10"	250	14 1/4	362	5 3/4	146	9 9/16	243	2 3/4	70	125	57
12"	300	16 5/8	422	7 1/8	181	11 3/8	289	3 1/4	83	200	91
14"	350	19 1/8	486	8 3/4	222	12 1/2	318	3 3/16	81	325	147
16"	400	21 1/4	540	9 1/8	232	14 5/16	364	4 1/8	105	415	188
18"	450	23 1/2	597	10 3/8	264	16 7/8	429	4 13/16	122	555	252
20"	500	25 3/4	654	11 1/2	292	17 15/16	456	5 5/8	143	725	329
24"	600	30 1/2	775	12 1/2	318	21 9/16	548	7 1/16	179	1100	499
26"	650	32 7/8	835	14	356	24 3/8	619	8	203	1605	728
30"	750	37 1/2	953	15 11/16♦	368	28 3/4	730	9 1/16	230	2050	930
36"	900	44	1118	19 1/4♦	483	35	889	11 3/16	284	3573	1621
42"	1050	45 7/8	1289	22 3/8	568	41	1041	14 3/4	375	4723	2147
48"	1200	52 1/8	1492	24 3/4	629	47	1194	16 1/2	419	6090	2768

ASME Class 600

Size		A		B		C		D		Weight	
in	mm	in	mm	in	mm	in	mm	in	mm	lbs.	kg.
2"	50	4 3/8	111	2 3/8	60	1 15/16	49	–	–	7	3
2 1/2"	65	5 1/8	130	2 5/8	67	2 11/32	60	1/8	3	11	5
3"	80	5 7/8	149	2 7/8	73	2 29/32	74	1/4	6	15	7
4"	100	7 5/8	194	3 1/8	79	3 53/64	97	7/8	22	26	12
5"	125	9 1/2	241	4 1/8	105	4 13/16	122	1	25	50	22.7
6"	150	10 1/2	267	5 3/8	136	5 49/64	146	1 7/16	36	80	36
8"	200	12 5/8	321	6 1/2	165	7 5/8	194	2	51	135	61
10"	250	15 3/4	400	8 3/8	213	9 9/16	243	2 9/32	58	238	108
12"	300	18	457	9	229	11 3/8	289	3 15/32	88	333	151
14"	350	19 3/8	492	10 3/4	273	12 1/2	318	2 3/4	70	455	206
16"	400	22 1/4	565	12	305	14 5/16	364	4 5/16	110	640	290
18"	450	24 1/8	613	14 1/4	362	16 1/8	410	3 11/16	94	890	404
20"	500	26 7/8	683	14 1/2	368	17 15/16	456	5 5/16	135	1120	508
24"	600	31 1/8	791	17 1/4	438	21 9/16	548	6 9/16	167	2040	925
26"	650	34 1/8	867	18	547	24	610	7 1/4	184	2530	1148
30"	750	38 1/4	972	18 7/8	398	28 3/4	730	9 9/16	243	3375	1531
36"	900	44 1/2	1130	25	635	33 3/4	857	11 15/16	303	6300	2858
42"	1050	48	1219	27 5/8	702	39 1/2	1003	14 1/4	362	8447	3832

ASME Class 900

Size		A		B		C		D		Weight	
in	mm	in	mm	in	mm	in	mm	in	mm	lbs.	kg.
2"	50	5 5/8	143	2 3/4	70	1 11/16	43	–	–	14	6
2 1/2"	65	6 1/2	165	3 1/4	83	2 1/8	54	1/16	2	16	7
3"	80	6 5/8	168	3 1/4	83	2 5/8	67	5/16	8	24	11
4"	100	8 1/8	206	4	102	3 7/16	87	9/16	14	40	18
5"	125	9 3/4	248	–	–	4 5/16	110	–	–	–	–
6"	150	11 3/8	289	6 1/4	159	5 3/16	132	1 1/16	27	115	52
8"	200	14 1/8	359	8 1/8	206	6 13/16	173	1 13/32	36	229	104
10"	250	17 1/8	435	9 1/2	241	8 1/2	216	1 13/16	46	388	176
12"	300	19 5/8	498	11 1/2	292	10 1/8	257	2 5/16	59	540	245
14"	350	20 1/2	521	14	356	11 1/2	292	2	51	926	420
16"	400	22 5/8	575	15 1/8	384	12 13/16	325	2 5/8	67	1152	523
18"	950	25 1/8	638	17 3/4	451	14 7/16	367	2 9/16	65	1318	598
20"	500	27 1/2	699	17 3/4	451	17 15/16	456	5 5/16	135	1426	647
24"	600	33	838	19 1/2	495	21 1/2	546	5 5/8	143	2729	1238

ASME Class 1500

Size		A		B		C		D		Weight	
in	mm	in	mm	in	mm	in	mm	in	mm	lbs.	kg.
2"	50	5 5/8	143	2 3/4	70	1 11/16	43	–	–	14	6
2 1/2"	65	6 1/2	165	3 1/4	83	2 1/8	54	1/16	2	16	7
3"	80	6 7/8	175	3 1/4	83	2 5/8	67	5/16	8	25	11
4"	100	8 1/4	210	4	102	3 7/16	87	9/16	14	43	20
5"	125	10	254	–	–	4 5/16	110	–	–	–	–
6"	150	11 1/8	283	6 1/4	159	5 3/16	132	1 1/16	27	110	50
8"	200	13 7/8	352	8 1/8	206	6 13/16	173	1 13/32	36	219	99
10"	250	17 1/8	435	9 3/4	248	8 1/2	216	1 11/16	43	397	180
12"	300	20 1/2	521	12	305	10 1/8	257	2 1/4	57	725	329
14"	350	22 3/4	578	14	356	11 1/2	292	2	51	948	430
16"	400	25 1/4	641	15 1/8	384	12 13/16	325	2 5/8	67	1380	627
18"	450	27 3/4	705	18 7/16	468	13 3/4	349	2 11/16	68	1900	863
20"	500	29 3/4	756	21	533	14 3/4	375	4	102	2750	1247
24"	600	35 1/2	902	22	559	15 1/8	384	4 1/8	105	4409	2000

ASME Class 2500

Size		A		B		C		D		Weight	
in	mm	in	mm	in	mm	in	mm	in	mm	lbs.	kg.
2"	50	5 3/4	146	2 3/4	70	1 11/16	43	–	–	15	7
2 1/2"	65	6 5/8	168	3 1/4	83	2 1/8	54	1/16	2	22	10
3"	80	7 3/4	197	3 3/8	86	2 5/8	67	1/4	6	31	14
4"	100	9 1/4	235	4 1/8	105	3 7/16	87	7/16	11	54	25
5"	125	11	279	–	–	4 5/16	110	–	–	–	–
6"	150	12 1/2	318	6 1/4	159	5 3/16	132	1 1/16	27	190	86
8"	200	15 1/4	387	8 1/8	206	6 13/16	173	1 11/16	43	285	129
10"	250	18 3/4	476	10	254	8 1/2	216	1 13/16	46	502	228
12"	300	21 5/8	549	12	305	10 1/8	257	2 3/16	56	963	437

♦These G Style valve dimensions do not meet API 594, please consult factory.

Dimensions

Style H Double Flange Retainerless

Double Flanged Style Valves bolt up similar to a bolted cap swing check or gate valve. Double flanged versions are offered as standard on larger size valves where the lay length of the body permits installation of two heavy nuts between the flanges. These valves are standard retainerless design.

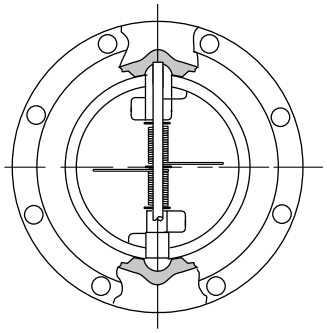

Pin must be vertical for horizontal flow.

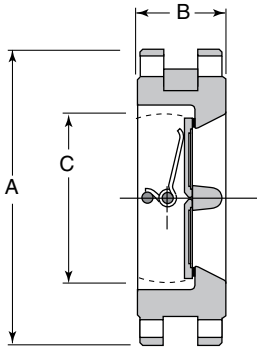

Flow Direction

ASME Class 150

Size		A		B		C		Weight	
in	mm	in	mm	in	mm	in	mm	lbs.	kg.
8"	200	13 ½	343	5	127	7 ⅝	194	93	42
10"	250	16	406	5 ¾	146	9 9/16	243	189	86
12"	300	19	483	7 ⅛	181	11 ⅜	289	308	140
14"	350	21	533	7 ¼	184	12 ½	318	352	160
16"	400	23 ½	597	7 ½	191	15	381	496	225
18"	450	25	635	8	203	16 ⅞	428	551	250
20"	500	27 ½	699	8 ⅝	219	18 ⅞	480	661	300
24"	600	32	813	8 ¾	222	22 ⅝	575	860	389
30"	750	38 ¾	984	12	305	29 ¼	743	1512	687
36"	900	46	1168	14 ½	368	35	889	2525	1145
42"	1050	53	1346	17	432	41	1041	4163	1888
48"	1200	59 ½	1511	20 ⅝	524	47	1194	5880	2667
54"	1350	66 ¼	1683	21 ¼	539	51 ½	1308	–	–
60"	1500	73	1854	26	660	56	1422	–	–
66"	1650	80	2032	31	787	62 ½	1588	–	–
72"	1800	86 ½	2197	36	914	68	1727	–	–
78"	1950	90	2286	39	991	74	1880	–	–
84"	2100	96	2438	42	1067	80	2032	–	–
88"	2200	–	–	–	–	–	–	–	–

ASME Class 300

Size		A		B		C		Weight	
in	mm	in	mm	in	mm	in	mm	lbs.	kg.
12"	300	20 ½	521	7 ⅛	181	11 ⅜	289	465	211
14"	350	23	584	8 ¾	222	12 ½	318	593	269
16"	400	25 ½	648	9 ⅛	232	14 ⅜	365	771	350
18"	450	28	711	10 ⅜	264	16 ⅛	409	970	440
20"	500	30 ½	775	11 ½	292	17 ⅞	454	1078	488
24"	600	36	914	12 ½	318	22 ⅛	562	1516	686
30"	750	43	1092	14 ½	368	28 ¾	730	3100	1406
36"	900	50	1270	19	483	35	864	4650	2109
42"	1050	50 ¾	1289	22 ⅜	568	41	1041	8670	3932
48"	1200	57 ¾	1467	24 ¾	629	47	1193	9950	4513
54"	1350	65 ¼	1657	27 ¼	692	51 ½	1308	–	–
60"	1500	71 ¼	1809	32 ½	826	56	1422	–	–

ASME Class 600

Size		A		B		C		Weight	
in	mm	in	mm	in	mm	in	mm	lbs.	kg.
12"	300	22	559	9	229	11 ⅜	289	612	277
14"	350	23 ¾	603	10 ¾	273	12 ½	318	826	375
16"	400	27	685	12	305	14 ⅜	365	951	430
18"	450	29 ¼	743	14 ¼	362	16 ⅛	409	1433	650
20"	500	32	813	14 ½	368	18	457	1763	800
24"	600	37	940	17 ¼	438	21 9/16	548	2755	1250
30"	750	44 ½	1130	19 ⅞	505	28 ¾	730	5070	2300
36"	900	51 ¾	1314	25	635	33 ¾	857	7605	3450
42"	1050	55 ¼	1403	27 37/64	701	39 ½	1003	9985	4529
48"	1200	62 ¾	1594	31	787	36	914	12600	5715

ASME Class 900

Size		A		B		C		Weight	
in	mm	in	mm	in	mm	in	mm	lbs.	kg.
12"	300	24	610	11 ½	292	10 ⅛	257	770	349
14"	350	25 ¼	641	14	356	11 ½	292	1240	561
16"	400	27 ¾	705	15 ⅛	384	12 ⅞	327	1653	750
18"	450	31	787	17 ¾	451	14 ½	368	2314	1050
20"	500	33 ¾	857	17 ¾	451	18	457	2866	1300
24"	600	41	1041	19 ½	495	21 ½	546	4175	1893
30"	750	48 ½	1232	25	635	26	660	6500	2948
36"	900	57 ½	1461	28	711	31	787	–	–
42"	1050	61 ½	1562	31 ½	800	36	914	–	–

Notes:
- Sizes not available in double flange design are offered as lug body design, see page 16.
- Please consult factory for other sizes and pressure classes available.
- Consult factory for dimensions and weights not shown.

Style H Lug Retainerless

Lug Style valves cover the bolting the entire length of the body. Lug valves are furnished in scallop and full body designs. Scallop is furnished whenever possible to keep weight to a minimum. These valves are standard retainerless design. Lug valves are furnished with thru-hole bolting in accordance with API 594. Threaded bolt holes are available but non standard as valve is not designed nor should be used for dead-end service.

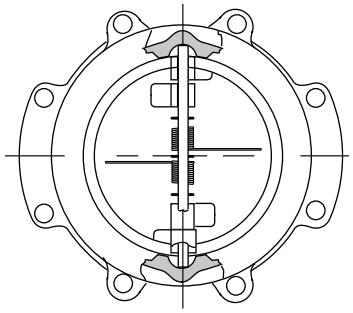

Scallop

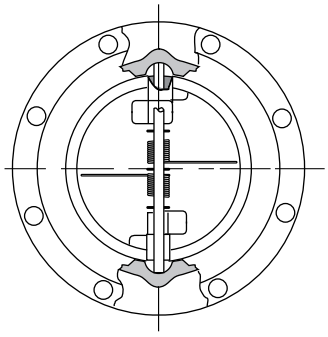

Full Body

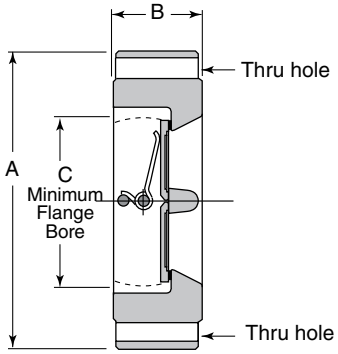

Flow Direction

Pin must be vertical
for horizontal flow.

ASME Class 150

Size		A		B		C		Weight	
in	mm	in	mm	in	mm	in	mm	lbs.	kg.
2"	50	6	152	2 3/8	60	1 15/16	49	17	8
2 1/2"	65	7	178	2 5/8	67	2 11/32	60	17	8
3"	80	7 1/2	191	2 7/8	73	2 29/32	74	44	20
4"	100	9	229	2 7/8	73	3 53/64	97	44	20
5"	125	10	254	3 3/8	86	4 13/16	122	48 1/2	22
6"	150	11	279	3 7/8	98	5 49/64	146	77	35

ASME Class 300

Size		A		B		C		Weight	
in	mm	in	mm	in	mm	in	mm	lbs.	kg.
2"	50	6 1/2	165	2 3/8	60	1 15/16	49	18	8
2 1/2"	65	7 1/2	191	2 5/8	67	2 11/32	60	22	10
3"	80	8 1/4	210	2 7/8	73	2 29/32	74	30	14
4"	100	10	254	2 7/8	73	3 53/64	97	44	20
5"	125	11	279	3 3/8	86	4 13/16	122	51	23
6"	150	12 1/2	318	3 7/8	98	5 49/64	146	84	38
8"	200	15	381	5	127	7 5/8	194	163	74
10"	250	17 1/2	445	5 3/4	146	9 9/16	243	270	123

ASME Class 600

Size		A		B		C		Weight	
in	mm	in	mm	in	mm	in	mm	lbs.	kg.
2"	50	6 1/2	165	2 3/8	60	1 15/16	49	18	8
2 1/2"	65	7 1/2	191	2 5/8	67	2 11/32	60	22	10
3"	80	8 1/4	210	2 7/8	73	2 29/32	74	30	14
4"	100	10 3/4	273	3 1/8	79	3 53/64	97	60	27
6"	150	14	356	5 3/8	136	5 49/64	146	183	83
8"	200	16 1/2	419	6 1/2	165	7 5/8	194	295	134
10"	250	20	508	8 3/8	213	9 9/16	243	540	245

- Consult factory for additional sizes and pressure classes.

ASME Class 900

Size		A		B		C		Weight	
in	mm	in	mm	in	mm	in	mm	lbs.	kg.
2"	50	8 1/2	216	2 3/4	70	1 11/16	43	37	17
3"	80	9 1/2	241	3 1/4	83	2 5/8	67	57	26
4"	100	11 1/2	292	4	102	3 7/16	87	98	45
6"	150	15	381	6 1/4	159	5 3/16	132	252	114
8"	200	18 1/2	470	8 1/8	206	6 13/16	173	441	200
10"	250	21 1/2	546	9 1/2	241	8 1/2	216	787	357

ASME Class 1500

Size		A		B		C		Weight	
in	mm	in	mm	in	mm	in	mm	lbs.	kg.
2"	50	8 1/2	216	2 3/4	70	1 11/16	43	37	17
3"	80	10 1/2	267	3 1/4	83	2 5/8	67	70	32
4"	100	12 1/4	311	4	102	3 7/16	87	112	51
6"	150	15 1/2	394	6 1/4	159	5 3/16	132	262	119
8"	200	19	483	8 1/8	206	6 13/16	173	488	221
10"	250	23	584	9 3/4	248	8 1/2	216	917	416
12"	300	26 1/2	673	12	305	10 1/8	257	1425	646
14"	350	29 1/2	749	14	356	11 1/2	292	2045	928
16"	400	32 1/2	826	15 1/8	384	12 13/16	325	2600	1179
18"	450	36	914	18 7/16	468	13 3/4	349	3883	1761
20"	500	38 3/4	984	21	533	14 3/4	348	5700	2580
24"	600	46	1168	22	559	15 1/8	384	7150	3236

ASME Class 2500

Size		A		B		C		Weight	
in	mm	in	mm	in	mm	in	mm	lbs.	kg.
2"	50	9 1/4	235	2 3/4	70	1 11/16	43	48	22
3"	80	12	305	3 3/8	86	2 5/8	67	93	42
4"	100	14	356	4 1/8	105	3 7/16	87	152	69
6"	150	19	483	6 1/4	159	5 3/16	132	386	175
8"	200	21 3/4	552	8 1/8	206	6 13/16	173	682	309
10"	250	26 1/2	673	10	254	8 1/2	216	1421	645
12"	300	30	762	12	305	10 1/8	257	2248	1020

Dimensions

Style X Extended Body Wafer Check

The "Extended Body" version of the Duo-Chek® was designed for extremely fast opening conditions. These types of applications are generally associated with compressed gas or steam that causes damage from the explosive opening effect on the closure mechanism. This damage can render them inoperative. This is especially true with slow response valves such as swing and titling disc check valves.

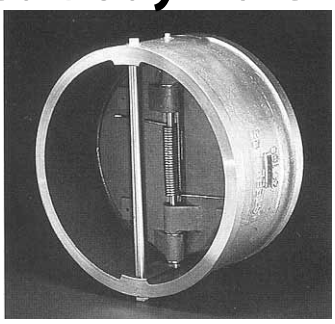

The Style X body design has special geometry and plate configuration to allow each plate to strike the stop pin in its center of percussion. To absorb high impacts, the stop pin and hinge lugs are oversized.

Typical applications include centrifugal compressor discharge where compressors are subject to "surging", air separation plants, pipelines where compressors are mounted in parallel, and steam extraction. Style X Duo-Chek® valves are generally not required for liquid applications.

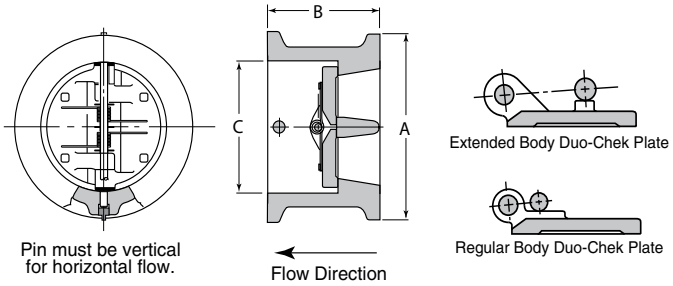

Installation Dimensions Pressure Classes 150 – 2500

ASME Class 150

Size		A		B		C		Weight	
in	mm	in	mm	in	mm	in	mm	lbs.	kg.
10"	250	13 3/8	340	7 1/4	184	10 3/4	273	166	75
12"	300	16 1/8	410	9	229	12 3/4	324	244	111
14"	350	17 3/4	451	8 3/8	213	14	356	260	118
16"	400	20 1/4	514	9 1/2	241	16	406	345	157
18"	450	21 5/8	549	10 3/8	264	18	457	427	194
20"	500	23 7/8	606	11 3/4	298	20	508	548	249
24"	600	28 1/4	718	13 3/4	349	24	610	874	396
26"	650	30 1/2	775	18	457	26	660	1741	790
30"	750	34 3/4	883	18	457	30	762	1544	700
32"	800	37	940	20 7/8	530	32	813	1638	743
36"	900	41 1/4	1048	21 7/8	556	36	914	2750	1247
42"	1050	48	1219	25 3/4	654	42	1067	3862	1752
48"	1200	54 1/2	1384	30 7/8	784	48	1219	6000	2722
54"	1350	61	1550	32 3/4	832	54	1372	7462	3385

ASME Class 300

Size		A		B		C		Weight	
in	mm	in	mm	in	mm	in	mm	lbs.	kg.
10"	250	14 1/4	362	7 1/4	184	10 3/4	273	166	75
12"	300	16 5/8	422	9	229	12 3/4	324	244	111
14"	350	19 1/8	486	10 1/4	260	14	356	407	185
16"	400	21 1/4	540	11 1/8	283	16	406	533	242
18"	450	23 1/2	597	12 1/2	318	18	457	698	317
20"	500	25 3/4	654	13 3/4	349	20	508	900	408
24"	600	30 1/2	775	16	406	24	610	1446	656
28"	700	35 7/8	911	20 1/4	514	28	711	1992	904
30"	750	37 1/2	953	20 5/8	524	30	762	2457	1115
36"	900	44	1118	25	635	36	914	3947	1790
42"	1050	50 3/4	1289	31 7/8	810	42	1067	6523	2959
48"	1200	58 3/4	1492	35	889	48	1219	7483	3394

Consult factory for additional sizes and pressure classes.

ASME Class 600

Size		A		B		C		Weight	
in	mm	in	mm	in	mm	in	mm	lbs.	kg.
10"	250	15 3/4	400	9 7/8	251	10 3/4	273	285	130
12"	300	18	457	11 5/8	295	12 3/4	324	366	166
14"	350	19 3/8	492	12 3/4	324	14	356	485	220
16"	400	22 1/4	565	14 1/2	368	16	406	705	320
18"	450	24 1/8	613	16 3/4	425	18	457	1057	480
20"	500	26 7/8	683	17 1/2	445	20	508	1531	695
24"	600	31 1/8	791	21 1/4	540	24	610	2240	1016
28"	700	36	914	23	584	28	711	3277	1486
30"	750	38 1/4	972	26 3/4	680	30	762	3746	1699
36"	900	44 1/2	1130	31	787	36	914	7000	3175
48"	1200	54 3/4	1391	40 1/8	1019	48	1219	9972	4523

ASME Class 900

Size		A		B		C		Weight	
in	mm	in	mm	in	mm	in	mm	lbs.	kg.
10"	250	17 1/8	435	10 1/4	260	10 3/4	273	462	210
12"	300	19 5/8	498	12 13/16	325	12 3/4	324	605	274
14"	350	20 1/2	521	14 5/8	371	14	356	1030	467
16"	400	22 5/8	575	15 1/2	394	16	406	1553	705
20"	500	27 1/2	699	19 1/2	495	20	508	1583	718
24"	600	33	838	22 1/4	565	24	610	3029	1374
30"	750	39 3/4	1010	28 7/8	734	30	762	6310	2862

ASME Class 1500

Size		A		B		C		Weight	
in	mm	in	mm	in	mm	in	mm	lbs.	kg.
10"	250	17 1/8	435	11 1/2	292	10 3/4	273	476	216
12"	300	20 1/2	521	13 7/8	353	12 3/4	324	805	365
14"	350	22 3/4	578	14 5/8	371	14	356	1080	490
16"	400	25 1/4	641	16 1/2	419	16	406	1530	694
18"	450	27 3/4	705	20 1/4	514	18	457	2109	957
20"	500	29 3/4	756	21 7/8	556	20	508	2376	1077
24"	600	35 1/2	902	24 7/8	632	24	610	4329	1964

ASME Class 2500

Size		A		B		C		Weight	
in	mm	in	mm	in	mm	in	mm	lbs.	kg.
10"	250	18 3/4	476	11 1/2	292	10 3/4	273	577	262
12"	300	21 5/8	549	13 7/8	352	12 3/4	324	598	271

DIN Wafer Valve Outside Diameter of Body

PN 6, 10, 16 (ASME Class 150)

Size		PN	A (DIN)*	
in	mm		mm	in
2"	50	6	98	3 27/32
		10	109	4 9/32
		16	109	4 9/32
2 ½"	65	6	118	4 5/8
		10	129	5 1/16
		16	129	5 1/16
3"	80	6	134	5 1/4
		10	144	5 21/32
		16	144	5 21/32
4"	100	6	154	6 1/16
		10	164	6 7/16
		16	164	6 7/16
5"	125	6	184	7 7/32
		10	194	7 5/8
		16	194	7 5/8
6"	150	6	209	8 7/32
		10	220	8 21/32
		16	220	8 21/32
8"	200	6	264	10 3/8
		10	275	10 13/16
		16	275	10 13/16
10"	250	6	319	12 17/32
		10	330	13
		16	331	13 1/32
12"	300	6	375	14 3/4
		10	380	14 15/16
		16	386	15 3/16
14"	350	6	425	16 23/32
		10	440	17 5/16
		16	446	17 17/32
16"	400	6	475	18 11/16
		10	491	19 5/16
		16	498	19 19/32
18"	450	10	541	21 9/32
		16	558	21
20"	500	6	580	22 13/16
		10	596	23 7/16
		16	620	24 13/16
24"	600	6	681	26 25/32
		10	698	27 15/32
		16	737	29
28"	700	6	786	30 15/16
		10	813	32
		16	807	31 3/4
32"	800	6	893	35 5/32
		10	920	36 7/32
		16	914	35 15/16
36"	900	6	993	39 3/32
		10	1020	40 5/32
		16	1014	39 29/32
40"	1000	6	1093	43 1/32
		10	1127	44 3/8
		16	1131	44 1/2
48"	1200	6	1310	51 9/16
		10	1344	52 15/16
		16	1345	52 15/16

PN 25, 40 (ASME Class 300)

Size		PN	A (DIN)*	
in	mm		mm	in
2"	50	25	109	4 9/32
		40	109	4 9/32
2 ½"	65	25	129	5 1/16
		40	129	5 1/16
3"	80	25	144	5 21/32
		40	144	5 21/32
4"	100	25	170	6 11/16
		40	170	6 11/16
5"	125	25	196	7 11/16
		40	196	7 11/16
6"	150	25	226	8 7/8
		40	226	8 7/8
8"	200	25	286	11 1/4
		40	293	11 17/32
10"	250	25	343	13 1/2
		40	355	13 31/32
12"	300	25	403	15 27/32
		40	420	16 17/32
14"	350	25	460	18 3/32
		40	477	18 3/4
16"	400	25	517	20 11/32
		40	549	21 19/32
18"	450	40	574	22 19/32
20"	500	25	627	24 11/16
		40	631	24 13/16
24"	600	25	734	28 7/8
		40	750	29 1/2

PN 64, 100 (ASME Class 600)

Size		PN	A (DIN)*	
in	mm		mm	in
2"	50	64	115	4 1/2
		100	121	4 3/4
2 ½"	65	64	140	5 1/2
		100	146	5 3/4
3"	80	64	150	5 29/32
		100	156	6 1/8
4"	100	64	176	6 29/32
		100	183	7 3/16
5"	125	64	213	8 3/8
		100	220	8 27/32
6"	150	64	250	9 13/16
		100	260	10 7/32
8"	200	64	312	12 9/32
		100	327	12 27/32
10"	250	64	367	14 7/16
		100	394	15 1/2
12"	300	64	427	16 25/32
		100	461	18 1/8
14"	350	64	489	19 1/4
		100	515	20 1/4
16"	400	64	546	21 15/32
		100	575	22 5/8
20"	500	64	660	25 31/32
		100	708	27 27/32
24"	600	64	768	30 7/32
		100	819	32 7/32

PN 160 (ASME Class 900)

Size		PN	A (DIN)*	
in	mm		mm	in
2"	50	160	121	4 3/4
2 ½"	65	160	146	5 3/4
3"	80	160	156	6 1/8
4"	100	160	183	7 3/16
5"	125	160	220	8 27/32
6"	150	160	260	10 7/32
8"	200	160	327	12 27/32
10"	250	160	391	15 3/8
12"	300	160	461	18 1/8

PN 250 (ASME Class 1500)

Size		PN	A (DIN)*	
in	mm		mm	in
2"	50	250	126	4 15/16
2 ½"	65	250	156	6 1/8
3"	80	250	173	6 25/32
4"	100	250	205	8 1/16
5"	125	250	245	9 5/8
6"	150	250	287	11 9/32
8"	200	250	361	14 3/16
10"	250	250	445	17 1/2
12"	300	250	542	21 5/16

PN 320 (ASME Class 2500)

Size		PN	A (DIN)*	
in	mm		mm	in
2"	50	320	136	5 11/32
2 ½"	65	320	173	6 25/32
3"	80	320	193	7 19/32
4"	100	320	232	9 1/8
5"	125	320	277	10 29/32
6"	150	320	314	12 11/32
8"	200	320	401	15 25/32
10"	250	320	492	19 11/32

*Dimension A applies to drawing on page 13. Other dimensions for ASME Classes shown apply to these valves with DIN outside diameters.

Stud Selection

Wafer Styles G (Retainered) and H (Retainerless)

Raised face flanges

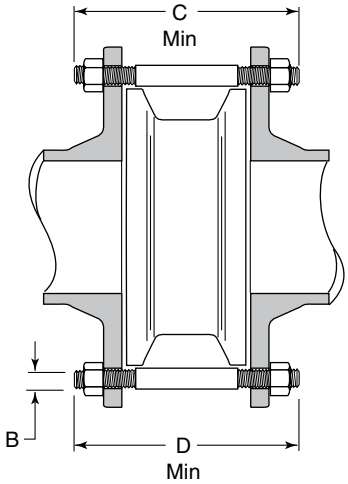

Ring joint flanges

ASME Class 125 (Cast Iron valves only)

Valve Size		No. of Studs	B Bolt Diameter		C Flat Face	
in	mm		in	mm	in	mm
2"	50	4	⅝	16	5 ¼	133
2 ½"	65	4	⅝	16	5 ⅜	136
3"	80	4	⅝	16	5 ⅝	143
4"	100	8	⅝	16	6 ¼	159
5"	125	8	¾	19	6 ¾	171
6"	150	8	¾	19	7	178
8"	200	8	¾	19	8	203
10"	250	12	⅞	22	9	229
12"	300	12	⅞	22	10 ½	267
14"	350	12	1	25	12 ¾	324
16"	400	16	1	25	13 ¼	337
18"	450	16	1 ⅛	29	14 ¼	362
20"	500	20	1 ⅛	29	15	381
24"	600	20	1 ¼	32	16	406
26"	650	24	1 ¼	32	22 ¾	578
30"	750	28	1 ¼	32	20	508
36"	900	32	1 ½	38	23 ½	597
42"	1050	36	1 ½	38	26 ½	673
48"	1200	44	1 ½	38	30 ½	775
54"	1350	44	1 ¾	44	32 ¼	819
60"	1500	52	1 ¾	44	–	–
66"	1650	52	1 ¾	44	–	–
72"	1800	60	1 ⅛	29	–	–
78"	1950	56	2	51	–	–
84"	2100	64	2 ⅛	54	–	–
88"	2200	64	2 ¼	57	–	–

ASME Class 150

Valve Size		No. of Studs	B Bolt Diameter		C Raised Face		D Ring Joint	
in	mm		in	mm	in	mm	in	mm
2"	50	4	⅝	16	5 ¾	146	6 ¼	159
2 ½"	65	4	⅝	16	6 ¼	159	7	178
3"	80	4	⅝	16	6 ¾	171	7 ¼	184
4"	100	8	⅝	16	6 ¾	171	7 ¼	184
5"	125	8	¾	19	7 ½	191	8	203
6"	150	8	¾	19	8	203	8 ½	216
8"	200	8	¾	19	9 ½	241	10	254
10"	250	12	⅞	22	10 ½	267	11	279
12"	300	12	⅞	22	12	305	12 ½	318
14"	350	12	1	25	12 ¾	324	13 ¼	337
16"	400	16	1	25	13 ¼	337	13 ¾	349
18"	450	16	1 ⅛	29	14 ¼	362	14 ¾	375
20"	500	20	1 ⅛	29	15	381	15 ½	394
24"	600	20	1 ¼	32	15 ¾	400	16 ¼	413
26"	650	24	1 ¼	32	22 ¾	578	23 ¼	591
30"	750	28	1 ¼	32	21 ¼	540	22 ¾	578
36"	900	32	1 ½	38	26 ¼	667	39	679
42"	1050	36	1 ½	38	28 ½	724	–	–
48"	1200	44	1 ½	38	33	838	–	–
54"	1350	44	1 ¾	44	35	889	–	–
60"	1500	52	1 ¾	44	–	–	–	–
66"	1650	52	1 ¾	44	–	–	–	–
72"	1800	60	1 ⅛	29	–	–	–	–
78"	1950	56	2	51	–	–	–	–
84"	2100	64	2 ⅛	54	–	–	–	–
88"	2200	64	2 ¼	57	–	–	–	–

Stud dimensions apply to styles G & H for Lug style thru-hole bolting design.

Stud Selection

Wafer Styles G (Retainered) and H (Retainerless)

ASME Classes 250 (Cast Iron valves only) & 300

Valve Size		No. of Studs	B Bolt Diameter		C Raised Face		D Ring Joint*	
in	mm		in	mm	in	mm	in	mm
2"	50	8	⅝	16	6	152	6 ¾	171
2 ½"	65	8	¾	19	6 ¾	171	7 ½	191
3"	80	8	¾	19	7	178	8	203
4"	100	8	¾	19	7 ½	191	8 ¼	210
5"	125	8	¾	19	8 ¼	210	9	229
6"	150	12	¾	19	9	229	9 ¾	248
8"	200	12	⅞	22	10 ½	267	11 ¼	286
10"	250	16	1	25	12 ¼	311	13	330
12"	300	16	1 ⅛	29	14	356	14 ¾	375
14"	350	20	1 ⅛	29	16	406	16 ¾	425
16"	400	20	1 ¼	32	17	432	17 ¾	451
18"	450	24	1 ¼	32	18 ½	470	19 ¾	489
20"	500	24	1 ¼	32	19 ¾	502	20 ½	521
24"	600	24	1 ½	38	21 ¾	552	22 ¾	578
26"	650	28	1 ⅝	41	24 ¼	616	25 ¼	641
30"	750	28	1 ¾	44	27 ¼	692	28 ½	724
36"	900	32	2	51	32 ¼	819	15 ½	851
42"	1050	36	2	51	36 ½	927	37 ¾	959
48"	1200	40	2	51	40	1016	-	-

*Available in Class 300 only.

ASME Class 600

Valve Size		No. of Studs	B Bolt Diameter		C Raised Face		D Ring Joint	
in	mm		in	mm	in	mm	in	mm
2"	50	8	⅝	16	6 ¾	171	7	178
2 ½"	65	8	¾	19	7 ½	191	7 ¾	197
3"	80	8	¾	19	8	203	8 ¼	210
4"	100	8	⅞	22	9 ¼	235	9 ¼	235
5"	125	8	1	25	10 ¾	273	11	279
6"	150	12	1	25	12 ¼	311	12 ½	318
8"	200	12	1 ⅛	29	14 ¼	362	14 ½	368
10"	250	16	1 ¼	32	17	432	17 ¼	438
12"	300	20	1 ¼	32	18	457	18	457
14"	350	20	1 ⅜	35	20 ¼	514	20 ½	521
16"	400	20	1 ½	38	22 ¼	565	22 ½	572
18"	450	20	1 ⅝	41	25 ¼	641	25 ½	648
20"	500	24	1 ⅝	41	26	660	26 ¼	667
24"	600	24	1 ⅞	48	30 ¼	768	30 ¾	781
26"	650	28	1 ⅞	48	31 ½	800	32	813
30"	750	28	2	51	34 ¼	870	34 ¾	883
36"	900	28	2 ½	64	41	1041	20 ½	1060
42"	1050	28	2 ¾	70	47	1194	47 ½	1207

Stud dimensions apply to styles G & H for Lug style thru-hole bolting design.

ASME Class 900

Valve Size		No. of Studs	B Bolt Diameter		C Raised Face		D Ring Joint	
in	mm		in	mm	in	mm	in	mm
2"	50	8	⅞	22	8 ¾	222	8 ¾	222
2 ½"	65	8	1	25	9 ¾	248	9 ¾	248
3"	80	8	⅞	22	9 ¼	235	9 ¼	235
4"	100	8	1 ⅛	29	11	279	11	279
6"	150	12	1 ⅛	29	14	356	14 ¼	362
8"	200	12	1 ⅜	35	17	432	17 ¼	438
10"	250	16	1 ⅜	35	19	483	19	483
12"	300	20	1 ⅜	35	21 ¾	552	21 ¾	552
14"	350	20	1 ½	38	25	635	25 ½	648
16"	400	20	1 ⅝	41	26 ¾	679	27	686
18"	450	20	1 ⅞	48	30 ¾	781	31 ½	800
20"	500	20	2	51	31 ½	800	32 ¼	819
24"	600	20	2 ½	64	36 ¾	933	37 ¼	946

ASME Class 1500

Valve Size		No. of Studs	B Bolt Diameter		C Raised Face		D Ring Joint	
in	mm		in	mm	in	mm	in	mm
2"	50	8	⅞	22	8 ¾	222	8 ¾	222
2 ½"	65	8	1	25	9 ¾	248	9 ¾	248
3"	80	8	1 ⅛	29	10 ½	267	10 ½	267
4"	100	8	1 ¼	32	12	305	12	305
6"	150	12	1 ⅜	35	16 ¾	425	16 ¾	425
8"	200	12	1 ⅝	41	19 ¾	502	20 ¼	514
10"	250	12	1 ⅞	48	23 ¼	591	23 ½	597
12"	300	16	2	51	27	686	27 ¾	705
14"	350	16	2 ¼	57	30 ¼	768	31 ¼	794
16"	400	16	2 ½	64	33	838	34	864
18"	450	16	2 ¾	70	38 ¾	965	39	900
20"	500	16	3	76	43 ¾	1111	44 ¾	1137
24"	600	16	3 ½	89	48	1219	49 ¼	1251

ASME Class 2500

Valve Size		No. of Studs	B Bolt Diameter		C Raised Face		D Ring Joint	
in	mm		in	mm	in	mm	in	mm
2"	50	8	1	25	10	254	10	254
2 ½"	65	8	1 ⅛	29	11 ¼	286	11 ¼	286
3"	80	8	1 ¼	32	12 ¼	311	12 ½	318
4"	100	8	1 ½	38	14 ¼	362	14 ¾	375
6"	150	8	2	51	20	508	20 ½	521
8"	200	12	2	51	23 ¾	603	24	610
10"	250	12	2 ½	64	29 ¼	743	30 ¼	768
12"	300	12	2 ¾	70	33 ¼	845	34 ¼	870

Installation & Stud Selection API 6A

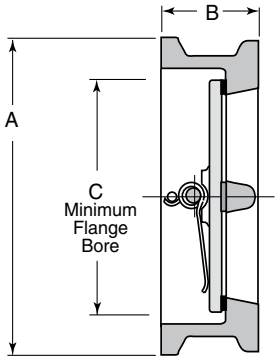

API Installation Dimensions - Class 2000

Size	A		B		C		Weight	
in	in	mm	in	mm	in	mm	lbs.	kg.
2 1/16"	4 3/8	143	2 3/4	70	1 11/16	43	14	6
2 9/16"	5 1/8	130	3 1/4	83	2 1/8	54	16	7
3 1/8"	5 7/8	149	3 1/4	83	2 5/8	67	24	11
4 1/16"	7 5/8	194	4	102	3 7/16	87	40	18
7 1/16"	10 1/2	267	6 1/4	159	5 3/16	132	115	52
9"	12 5/8	321	8 1/8	206	6 13/16	173	229	104
11"	15 3/4	400	9 1/2	241	8 1/2	216	388	176
13 5/8"	18	457	11 1/2	292	10 1/8	257	540	245

API Installation Dimensions - Class 3000

Size	A		B		C		Weight	
in	in	mm	in	mm	in	mm	lbs.	kg.
2 1/16"	5 5/8	143	2 3/4	70	1 11/16	43	14	6
2 9/16"	6 1/2	165	3 1/4	83	2 1/8	54	16	7
3 1/8"	6 5/8	168	3 1/4	83	2 5/8	67	25	11
4 1/16"	8 1/8	206	4	102	3 7/16	87	43	20
7 1/16"	11 3/8	289	6 1/4	159	5 3/16	132	110	50
9"	14 1/8	359	8 1/8	206	6 13/16	173	219	99
11"	17 1/8	435	9 3/4	248	8 1/2	216	397	180
13 5/8"	19 5/8	498	12	305	10 1/8	257	725	329

API Installation Dimensions - Class 5000

Size	A		B		C		Weight	
in	in	mm	in	mm	in	mm	lbs.	kg.
2 1/16"	5 5/8	143	2 3/4	70	1 11/16	43	15	7
2 9/16"	6 1/2	165	3 1/4	83	2 1/8	54	22	10
3 1/8"	6 7/8	175	3 3/8	86	2 5/8	67	31	14
4 1/16"	8 1/4	210	4 1/8	105	3 7/16	87	49	22
7 1/16"	11 1/8	283	6 1/4	159	5 3/16	132	190	86
9"	13 7/8	352	8 1/8	206	6 13/16	173	285	129
11"	17 1/8	435	10	254	8 1/2	216	502	228

NOTES: Dimensions for 10000 and 15000 ratings available on request.
Allowable leakage rates for API 6A (also API 6D) metal seated valves in accordance with API 598.

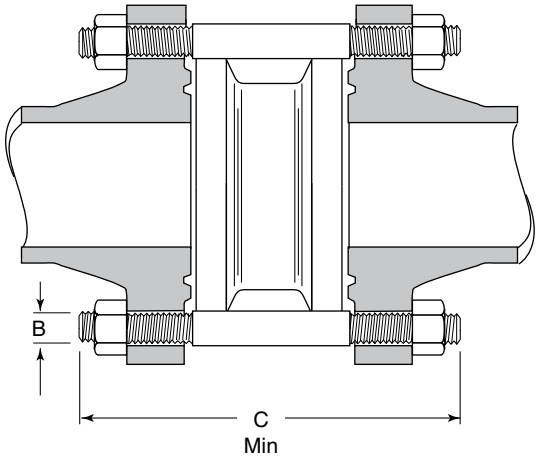

API Stud Selection - Class 2000

Size	No. of	B		C	
in	Studs	in	mm	in	mm
2 1/16"	8	5/8	16	8	203
2 9/16"	8	3/4	19	9	229
3 1/8"	8	3/4	19	9 1/2	241
4 1/16"	8	7/8	22	11 1/2	292
7 1/16"	12	1	25	14	356
9"	12	1 1/8	29	17	432
11"	16	1 1/4	32	19	483
13 5/8"	20	1 1/4	32	23 3/4	546

API Stud Selection - Class 3000

Size	No. of	B		C	
in	Studs	in	mm	in	mm
2 1/16"	8	7/8	22	9 1/4	235
2 9/16"	8	1	25	11 1/4	286
3 1/8"	8	7/8	22	11 1/2	292
4 1/16"	8	1 1/8	29	12	305
7 1/16"	12	1 1/8	29	15 1/4	387
9"	12	1 3/8	35	18 3/4	476
11"	16	1 3/8	35	20	508
13 5/8"	20	1 3/8	35	21 1/2	591

API Stud Selection - Class 5000

Size	No. of	B		C	
in	Studs	in	mm	in	mm
2 1/16"	8	7/8	22	9 1/4	235
2 9/16"	8	1	25	11 1/4	286
3 1/8"	8	1 1/8	29	12	305
4 1/16"	8	1 1/4	32	13	330
7 1/16"	12	1 3/8	35	18 3/4	476
9"	12	1 5/8	41	21	533
11"	12	1 7/8	48	24 1/2	622

Stud Selection - Pressure Classes 150 - 2500

Style X Extended Body Wafer Check

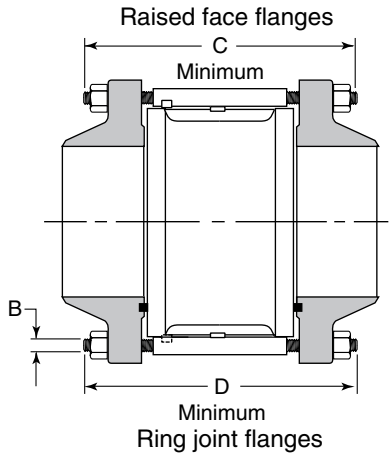

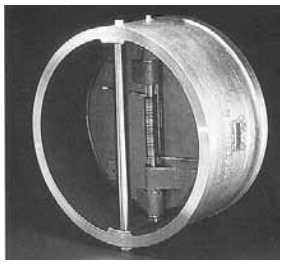

ASME Stud Selection Class 150

Valve Size		No. of Studs	B Bolt Diameter		C Raised Face		D Ring Joint	
in	mm		in	mm	in	mm	in	mm
10"	250	12	⅞	22	12	305	12 ½	318
12"	300	12	⅞	22	14	356	14 ½	368
14"	350	12	1	25	14	356	14 ½	368
16"	400	16	¾	19	14 ¾	375	15 ¼	387
18"	450	16	1 ⅛	29	16 ¾	425	17 ¼	438
20"	500	20	1 ⅛	29	18 ¼	464	18 ¾	476
24"	600	20	1 ¼	29	20 ¾	527	21 ¼	540
26"	650	24	1 ¼	32	26 ¾	679	27 ¼	692
30"	750	28	1 ¼	32	27 ¼	692	27 ¾	705
32"	800	28	1 ½	38	32	1690	32 ¾	832
36"	900	32	1 ½	32	32 ¼	819	32 ¾	832
42"	1050	36	1 ½	38	37 ¼	946	-	-
48"	1200	44	1 ½	38	43 ¼	1099	-	-
54"	1350	44	1 ¾	44	43 ½	1105	-	-

ASME Stud Selection Class 300

Valve Size		No. of Studs	B Bolt Diameter		C Raised Face		D Ring Joint	
in	mm		in	mm	in	mm	in	mm
10"	250	16	1	25	13 ¾	349	14 ½	368
12"	300	16	1 ⅛	29	16	406	16 ¾	425
14"	350	20	1 ⅛	29	17 ½	445	18 ¼	464
16"	400	20	⅞	22	18 ½	470	19	483
18"	450	24	1 ¼	32	20 ¾	527	21 ½	546
20"	500	24	1 ¼	32	22	641	22 ¾	578
24"	600	24	1 ½	29	15 ¼	648	26 ¼	667
28"	700	28	1 ⅝	41	31	787	31 ½	800
30"	750	28	1 ¾	44	32 ¼	819	33 ½	851
36"	900	32	2	51	38 ½	978	-	-
42"	1050	32	2	51	47 ½	1206	-	-
48"	1200	40	2	51	50 ¼	1276	-	-

ASME Stud Selection Class 600

Valve Size		No. of Studs	B Bolt Diameter		C Raised Face		D Ring Joint	
in	mm		in	mm	in	mm	in	mm
10"	250	16	1 ¼	32	18 ¼	464	18 ¾	476
12"	300	20	1 ¼	32	20 ½	521	20 ¾	527
14"	350	20	1 ⅜	35	22	559	22	559
16"	400	20	1 ⅛	29	24 ½	622	24 ½	622
18"	450	20	1 ⅝	41	30	762	30 ¼	768
20"	500	24	1 ⅝	41	29	737	29 ½	743
24"	600	24	1 ⅞	48	34 ¼	870	34 ¾	883
28"	700	28	2	51	36 ½	927	37	940
30"	750	28	2	51	42	1067	42 ½	1080
36"	900	28	2 ½	64	47	1194	-	-
48"	1050	32	2 ¾	70	62	1574	-	-

ASME Stud Selection Class 900

Valve Size		No. of Studs	B Bolt Diameter		C Raised Face		D Ring Joint	
in	mm		in	mm	in	mm	in	mm
10"	250	16	1 ⅜	35	19 ½	495	19 ¾	502
12"	300	20	1 ⅜	35	23	584	23 ¼	591
14"	350	20	1 ½	38	25 ¾	654	26 ¼	667
16"	400	20	1 ¼	32	26 ¾	679	27	686
20"	500	20	2	51	33 ¼	844	34	864
24"	600	20	2 ½	64	39 ¾	1010	40 ¾	1035
30"	750	20	3	76	48	1219	48 ½	1232

ASME Stud Selection Class 1500

Valve Size		No. of Studs	B Bolt Diameter		C Raised Face		D Ring Joint	
in	mm		in	mm	in	mm	in	mm
10"	250	12	1 ⅞	48	25	635	25 ¼	641
12"	300	16	2	51	29	737	29 ½	749
14"	350	16	2 ¼	57	31 ¼	794	32 ¼	819
16"	400	16	1 ½	38	34	864	35	889
18"	450	16	2 ¾	70	39 ¾	1010	41	1041
20"	500	16	3	76	43	1092	44	1118
24"	600	16	3 ½	89	49	1245	49 ¼	1251

ASME Stud Selection Class 2500

Valve Size		No. of Studs	B Bolt Diameter		C Raised Face		D Ring Joint	
in	mm		in	mm	in	mm	in	mm
10"	250	12	2 ½	64	31	787	31 ¾	806
12"	300	12	2 ¾	70	35 ½	902	36 ½	927

Technical Data

Valve Coefficient Cv and Average Spring Force (Class 125 - 300)

Valve Size		Cv	Spring Force (psi)
in	mm		
2"	50	75	0.23
2 ½"	65	95	0.26
3"	80	191	0.21
4"	100	377	0.22
5"	127	483	0.18
6"	150	821	0.14
8"	200	1,590	0.19
10"	250	2,920	0.18
12"	300	4,470	0.17
14"	350	5,870	0.15
16"	400	8,690	0.16
18"	450	10,940	0.15
20"	500	14,290	0.13
24"	600	23,000	0.10
30"	750	37,200	0.08
36"	900	59,000	0.08
42"	1050	92,000	0.05
48"	1200	126,000	0.06
54"	1350	186,000	-
60"	1500	217,000	-
66"	1650	280,000	-
72"	1800	350,000	-

- Coefficients for sizes above 72" please consult factory.
- Spring Force is an estimate of the pressure required to overcome the spring when valve is closed. This is not exact as valve cannot be used as a relief valve.
- Valves 6" and larger have independent springs.

Pressure Loss Information

- The curves show pressure loss available with the Duo-Chek® in horizontal flow.
- Duo-Chek® valves should be installed in horizontal flow with pins vertical for best performance. For other installations, contact the factory.
- Each piping system has a unique geometry which should be evaluated whenever the liquid media velocity exceeds 8 feet/second (2.4m/sec) through a swage or expansion (15° or greater included angle) directly upstream of the valve. Where practicable, **for maximum service life, and based on actual service,** a minimum of one (1) to five (5) pipe diameters distance should be maintained between the valve and the pump discharge and pipe fittings (swages or expansion).
- Systems with drastic flow decelerations may require higher torque springs for faster valve response and to reduce water hammer for non-slam applications. Please consult the factory.
- We can evaluate Duo-Chek® valves relative to your system behavior.

Pressure Loss Chart (Class 125 - 300)

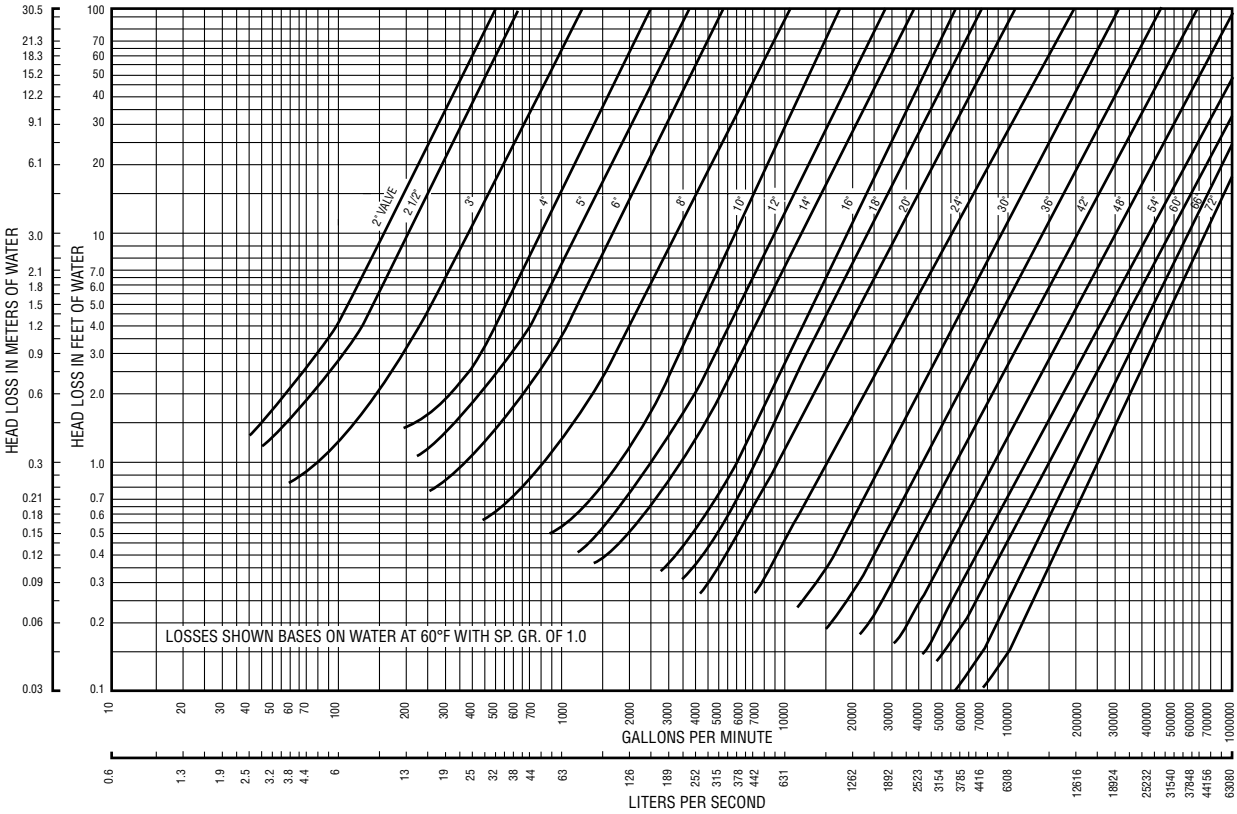

Additional Engineered Check Products

Noz-Chek®

Full Body Nozzle Check Valves

- Sizes 2" – 84"
- ASME Classes 150 – 4500
- Flanged, Hub-End, Weld-End
- Iron, Steel, and Stainless Steel
- ASME, DIN, JIS Standards

Uni-Chek®

Single-Disc Check Valves

- Sizes 2" – 36"
- ASME Classes 125 – 300
- Flanged, Plain, or Serrated Ends
- Cast Iron, Carbon Steel, and Stainless Steel
- Variety of external shaft options available

Compac-Noz®

Compact Body Nozzle Check Valves

- Sizes 12" – 60"
- ASME Classes 150 – 4500
- Flanged, Hub-End, Weld-End
- Iron, Steel, and Stainless Steel
- ASME, DIN, JIS Standards

Krombach®

Steam Extraction Check Valves

- Sizes 6" – 72"
- ASME Classes 150 – 300
- Double Flanged & Butt Weld Ends
- Steel, Stainless Steel and Welded Design

Notes

Notes

Notes

DUO-CHEK®

CRANE Energy Flow Solutions®

CRANE Energy Global Headquarters
Duo-Chek Customer Service
4526 Research Forest Drive, Suite 400
The Woodlands, Texas 77381 U.S.A.
Tel.: (1) 936-271-6500
Fax.: (1) 936-271-6510
www.craneenergy.com

CRANE
Energy Flow Solutions

Sydney, Australia Operations
146-154 Dunheved Circuit
St. Mary's NSW 2760
Tel: (61) 2-8889-0100
Fax: (61) 2-9673-3870

Belfast, Northern Ireland Operations
6 Alexander Road
Cregagh, Belfast BT6 9HJ
Tel: 44 (28) 9070 4222
Fax: 44 (28) 9040 1582

FLOW OF FLUIDS
www.flowoffluids.com

brands you trust.

ALOYCO® CENTER LINE® COMPAC-NOZ® CRANE® DUO-CHEK®
FLOWSEAL® SINCE 1864 JENKINS® FK® KROMBACH ARMATUREN be safe NOZ-CHEK® PACIFIC VALVES
STOCKHAM® triangle® UNI-CHEK® NUCLEAR VALVE SERVICES

EG-DC-CT-EN-L16-16-1202 (CV-600)

Crane Co., and its subsidiaries cannot accept responsibility for possible errors in catalogues, brochures, other printed materials, and website information. Crane Co. reserves the right to alter its products without notice, including products already on order provided that such alteration can be made without changes being necessary in specifications already agreed. All trademarks in this material are property of the Crane Co. or its subsidiaries. The Crane and Crane brands logotype (Aloyco®, Center Line®, Compac-Noz®, Crane®, Duo-Chek®, Flowseal®, Jenkins®, Krombach®, Noz-Chek®, Pacific Valves®, Stockham®, Triangle®, Uni-Chek®) are registered trademarks of Crane Co. All rights reserved.

© 2012 CRANE Energy Flow Solutions, www.craneenergy.com