Chemineer

CT Turbine Agitators Installation, Operation Maintenance Manual

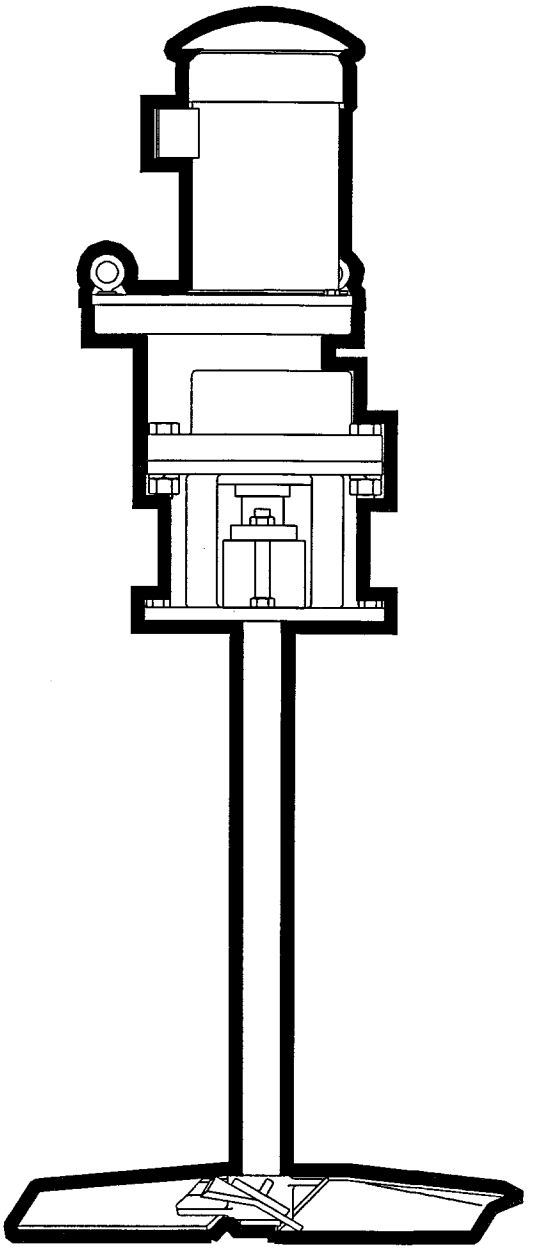

Equipment Reference:
CTD Style Agitators

For Service and
Information Contact

TABLE OF CONTENTS

	Page
Initial Inspection	**1**
Storage	**1**
Chemineer Assistance	**1**
Installation	**2**
Mounting	2
Agitator Drive Assembly	5
Install Impellers	7
Options: Angle Risers	10
Options: In-Tank Coupling	12
Operation	**14**
Agitator	14
Motor	15
Gear Drive	16
Lubrication & Maintenance	**17**
Motor	17
Gear Drive	19
Parts	**35**

TABLE OF CONTENTS

Page

Tables

Table 1: Recommended Beam Size 3
Table 2: Impeller Fastener Tightening Torque 8

Figures

Figure 1: CTD Open Tank Mounting 2
Figure 2: Angle Riser Mounting 4
Figure 3: Install Agitator Drive 5
Figure 4: Install Agitator Extension Shaft 6
Figure 5: Hub Detail: Orientation on Key 7
Figure 6: Style P-4 Impeller 8
Figure 7: Style S-4 Impeller 9
Figure 8: Style HE-3 Impeller 9
Figure 9: Angle Riser Mounting 10
Figure 10: Anchor Bolt Assembly 11
Figure 11: In-Tank Couplings 12
Figure 12: Gear Drive Lubrication 20
Figure 13: Remove Gear Drive 22
Figure 14: Remove Electric Motor 23
Figure 15: Remove Intermediate Shaft Assembly 24
Figure 16: Remove Gear Drive Output Shaft Assembly . . . 25
Figure 17: Disassemble Intermediate Shaft 26
Figure 18: Disassemble Gear Drive Output Shaft 27
Figure 19: Gear Drive Output Shaft Assembly 28
Figure 20: Intermediate Shaft Assembly 29
Figure 21: Bearing Cap Assembly 30
Figure 22: Assemble Motor/Cover Plate 31
Figure 23: Assemble Gear Drive 32
Figure 24: Remount Gear Drive 34

INITIAL INSPECTION

Step 1: Inspect crates. Upon receipt, inspect all crates and equipment for shipping damage. Report shipping damage to your local Chemineer office or to the factory in Dayton, Ohio. A claim should be filed immediately with the carrier involved.

Step 2: Uncrate. Check contents. Exercise care in uncrating and handling. Do not discard crate without carefully making sure that all agitator parts have been removed. This manual is referenced on the assembly drawing. Correct assembly requires both the assembly drawing and this manual.

Step 3: Questions? Call Chemineer. If the shipment is not complete or you do not understand what you have received, please contact *your local Chemineer office* immediately.

STORAGE

Do not remove protective coatings until the agitator is to be put into service. If the shipment is to be stored, *do not stack crates*. Store in a clean dry location which is free from wide variations in temperature. The storage area should be free from vibration and excessive heat.

At six-month intervals, inspect for external rust. Apply rust preventative as required. If the unit has been in storage for more than six months or subjected to adverse moisture conditions, have the motor dried thoroughly prior to operation.

CHEMINEER ASSISTANCE

Chemineer maintains a fully staffed Parts and Field Service Department ready to assist you with any service requirement. Simply contact *your local Chemineer Office*, or you can contact Parts/Field Service at the Chemineer Factory in Dayton, Ohio:

Local Sales Office	Or	Factory:	Chemineer, Inc. P.O. Box 1123 Dayton, OH 45401
		Phone:	(937) 454-3200
		FAX:	(937) 454-3375

MOUNTING

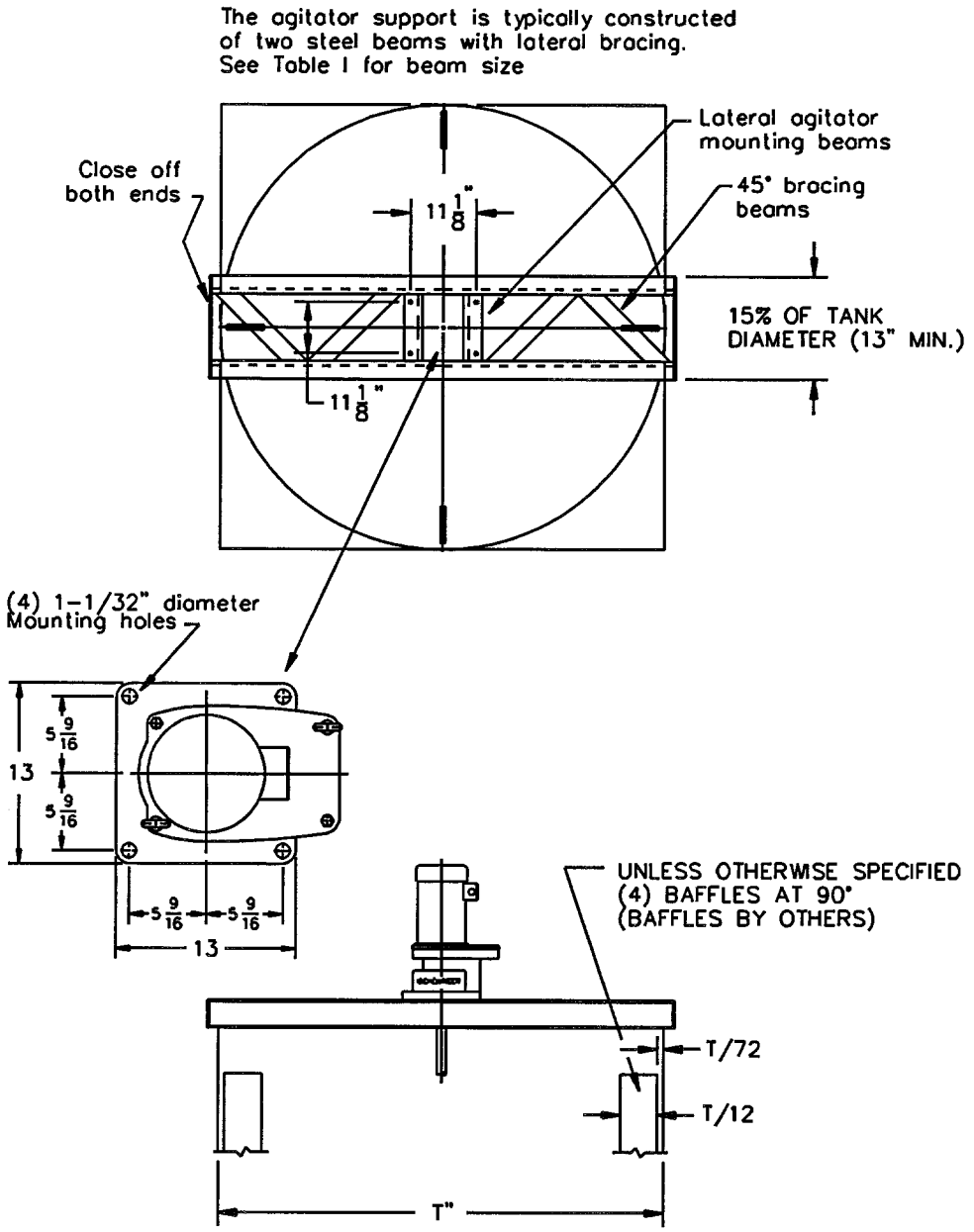

Figure 1: CTD Open Tank Mounting

MOUNTING: DESIGN LOADS

Unless otherwise stated on the agitator assembly drawing, the support structure design loads are:

Vertical Downward Load	- 600 lb (152 kg)
Torque Reaction	- 420 ft-lb (569 nt-m)
Bending Moment Reaction	- 1965 ft-lb (2664 nt-m)

In designing the structure to accommodate bending moment, the structure should be sufficiently rigid that the agitator extension shaft will not move more than 1/64 inch (.4 mm) per foot of length due to deflection of mounting system.

The agitator support in open tanks is typically constructed of two steel beams with lateral bracing. See *Table 1* for beam size.

TABLE 1: RECOMMENDED BEAM SIZES

Tank Diam	Beam Size	Tank Diam	Beam Size	Tank Diam	Beam Size
4' (1.2m)	C6 x 8.2	15' (4.6m)	W12 x 14	30' (9.1m)	W18 x 35
6' (1.8m)	C6 x 8.2	20' (6.1m)	W12 x 19	40' (12.2m)	W24 x 55
8' (2.4m)	C6 x 8.2	25' (7.6m)	W16 x 26	50' (15.2m)	W24 x 76
10' (3.0m)	C7 x 9.8				

ALTERNATE ANGLE RISER MOUNTED DRIVE

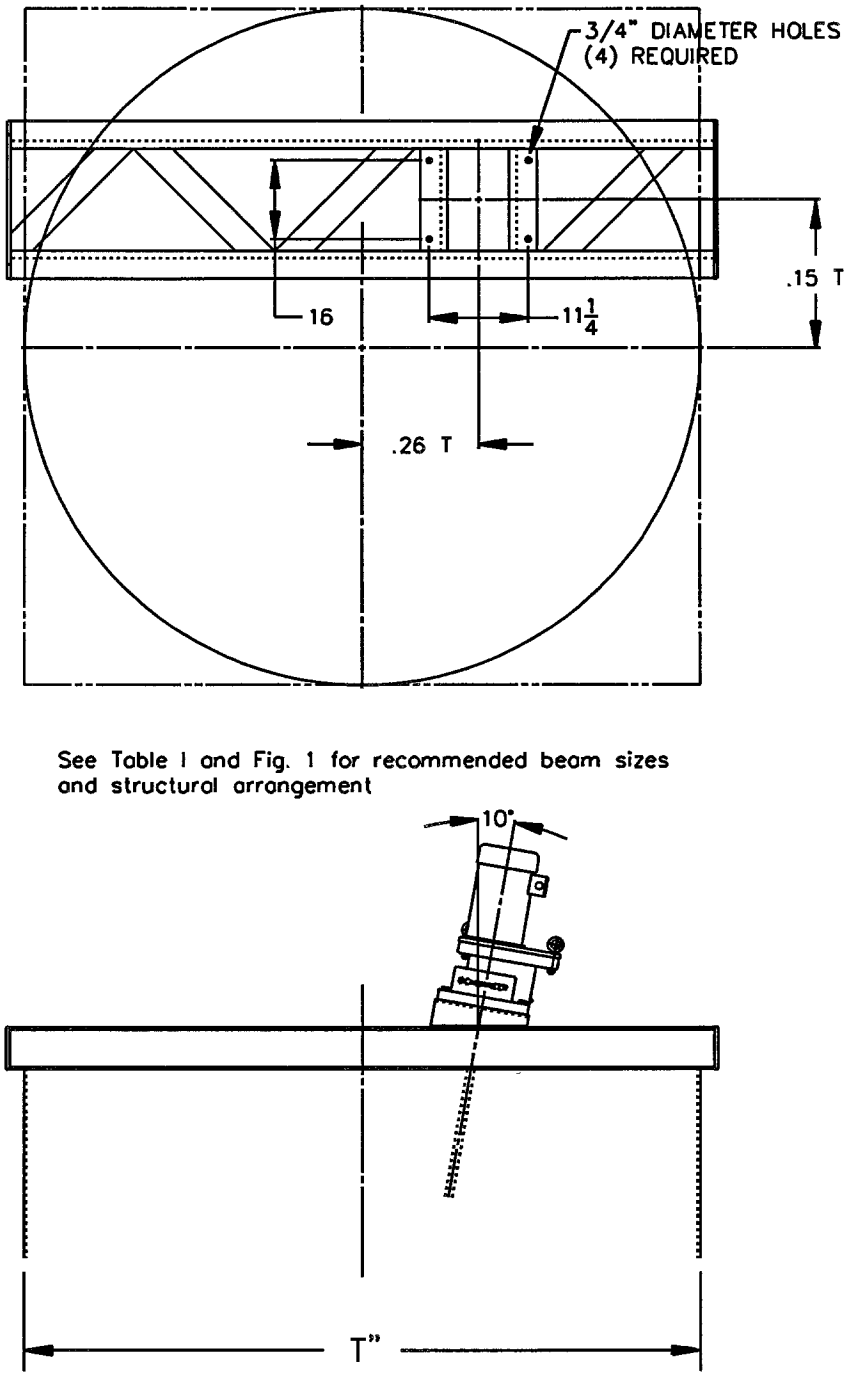

Figure 2: Angle Riser Mounting

AGITATOR DRIVE ASSEMBLY

Correct assembly requires both assembly drawing and this manual.

1. Lift agitator drive off shipping skid with a two point chain hoist using the two eyebolts **[201]** installed in the top of the gear housing.

2. Install the agitator drive on the support structure using a 5/8 inch (15 mm) customer-supplied fastener set **[1109]**. Fasteners as large as 1 inch (25 mm) may be used if the support structure has clearance for larger fasteners.

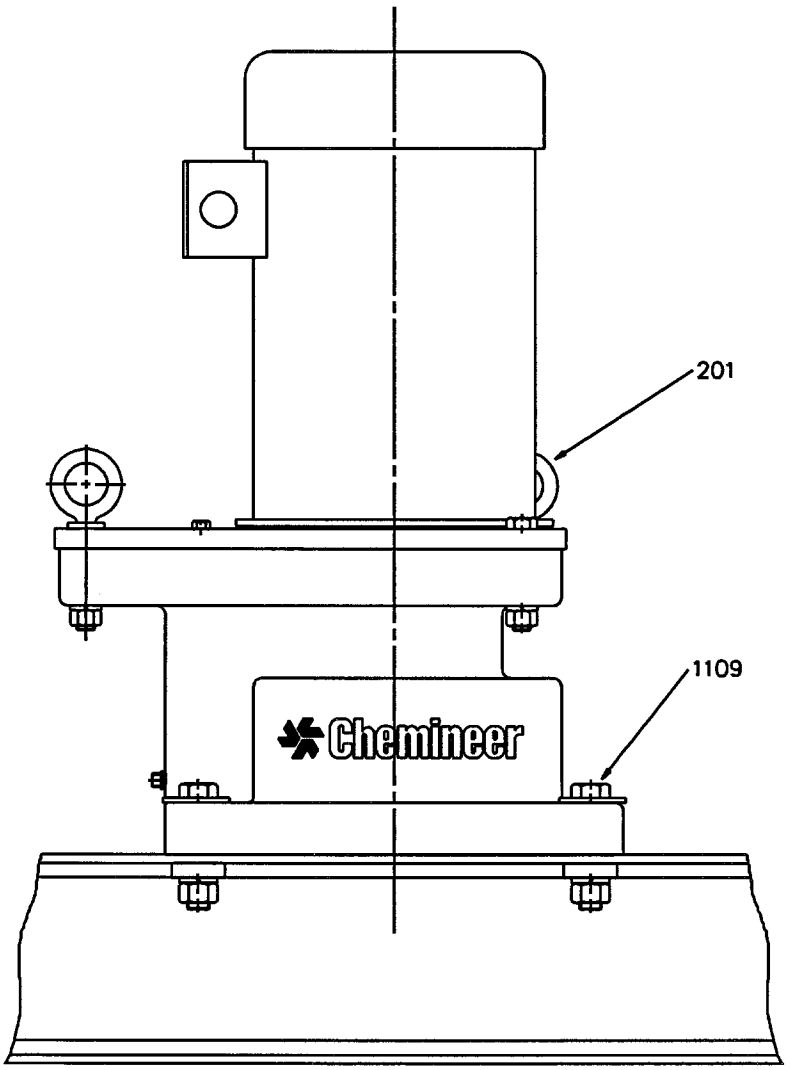

Figure 3: Install Agitator Drive

AGITATOR DRIVE ASSEMBLY

3. Carefully clean all dirt and grease from agitator extension shaft **[400]** and shaft coupling tapers **[304]**. Make sure that both surfaces are completely dry and free from any burrs or nicks.

   Install the coupling key **[306]** into the shaft keyway, making sure it is fully bottomed into the keyway. Slide the coupling on the agitator extension shaft until both seat firmly against each other. Be sure that the coupling is not hung up on the key or cocked at an angle to the agitator extension shaft.

   Install coupling washer **[303]** and locking tab **[302]**. Lubricate and install shaft bolt **[301]**; torque to 27 ft-lb (37 nt-m). Bend corners of locking tab up around the head of the shaft bolt.

   NOTE: Do not apply lubricant or anti-seize compound to coupling taper. Agitator extension shaft and tapered shaft coupling must be clean and dry.

   Connect the agitator extension shaft to the gear drive output shaft **[233]**, making sure that the coupling faces are clean and free of any burrs and nicks. Lubricate and install coupling bolts **[305]**; torque to 27 ft-lb (37 nt-m).

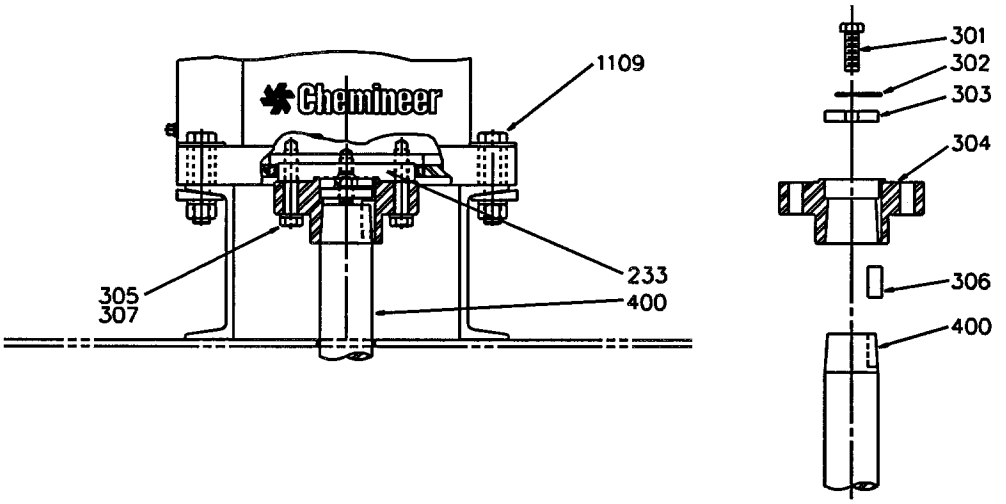

Figure 4: Install Agitator Extension Shaft

INSTALL IMPELLERS

1. Slide hub **[504]** onto the agitator extension shaft **[400]** up past the desired key location.

   Place the pin key **[402]** into the shaft keyway such that the pin extends into the drilled hole in the shaft keyway (*see the figure below* for key orientation). Slide the hub back down the agitator extension shaft, over the key, until the hub rests on the key.

   Tighten square head set screw **[505]** firmly onto the key. Torque to specified value, see *Table 2*, next page.

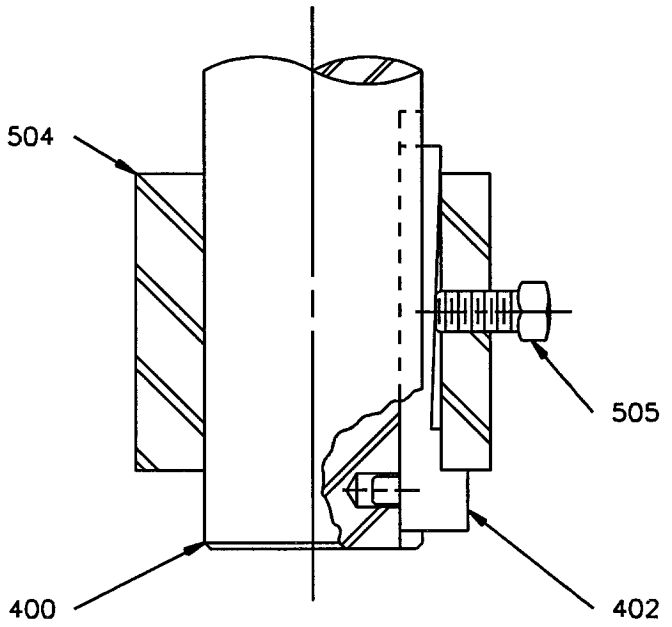

Figure 5: Hub Detail: Orientation on Key

INSTALL IMPELLERS

2. Bolt extension blades **[506]** to hub **[504]** with bolts **[507]**. Bolt stabilizer fins **[510]** to extension blades with bolts **[511]** (some units do not require stabilizer fins). Torque bolts to specified values in Table 2 below.

NOTE: On units with output speed over 100 rpm, the impeller parts will be matched marked. Install parts as marked so these impellers will be properly balanced.

Extreme care should be taken to see that bolts are properly tightened. It is recommended that all in-tank fastenings be checked for tightness after the first two weeks of operation.

TABLE 2: IMPELLER FASTENER TIGHTENING TORQUE BY THREAD SIZE

Impeller Fastener Tightening Torque[1]			
Thread Size	**CS[lubricated] ft-lb (nt-m)**	**SS[lubricated] ft-lb (nt-m)**	**Dry Threads ft-lb (nt-m)**
3/8 -16	11 (15)	16 (22)	20 (27)
1/2 - 13	27 (36)	39 (53)	49 (66)
5/8 - 11	51 (69)	74 (101)	93 (126)
3/4 - 10	90 (122)	131 (178)	164 (222)

[1]Use a suitable lubricant or leave these threads dry.

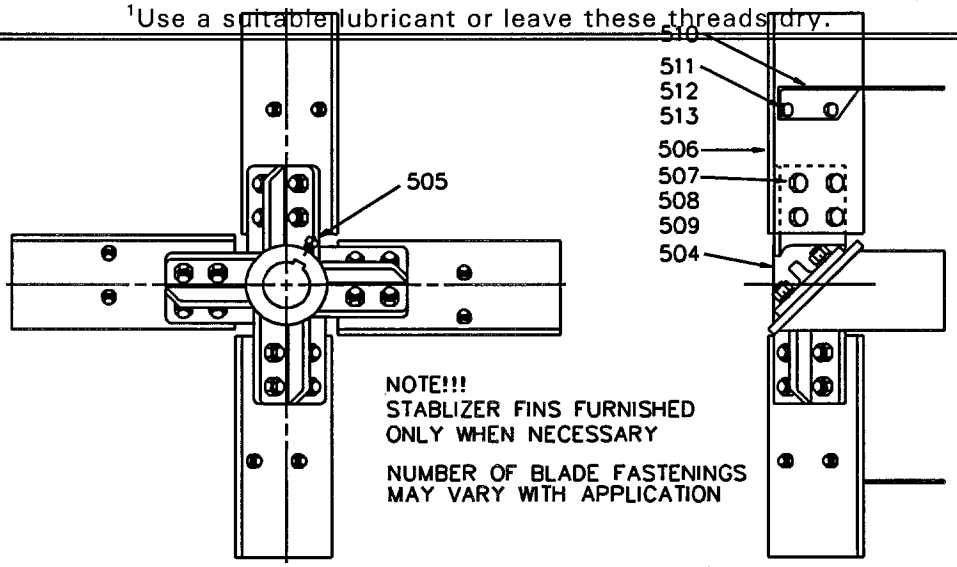

Figure 6: Style P-4 Impeller

INSTALL IMPELLERS

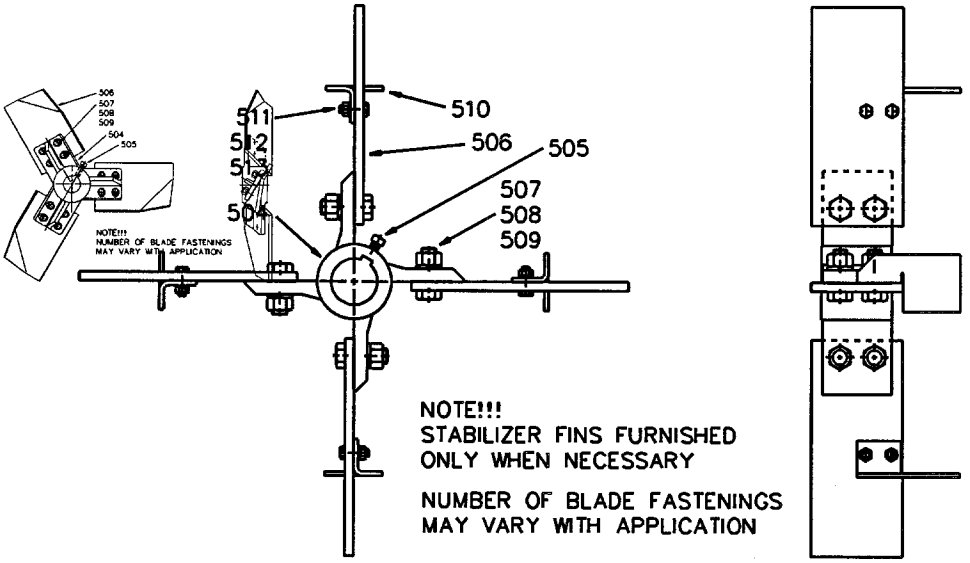

Figure 7: Style S-4 Impeller

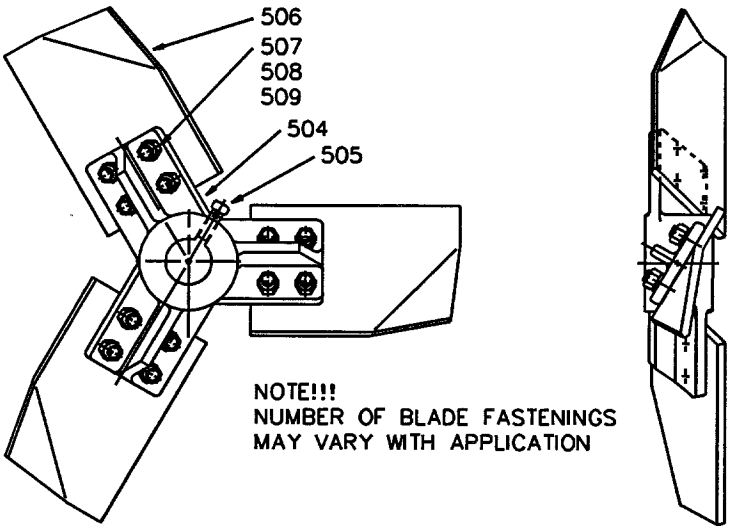

Figure 8: Style HE-3 Impeller

OPTIONS: ANGLE RISERS

Assemble angle risers **[801 & 802]** to gear drive **[200]** using four (4) hex bolts **[803]**, four (4) hex nuts **[804]**, eight (8) flatwashers **[805]** and four (4) spring lockwashers **[806]**.

Mount angle risers such that each riser is adjacent to the Chemineer Logo on the gear case and orient the angle so that the unit nameplate is low. Lubricate and install bolts; torque to 51 ft-lb (69 nt-m).

Install the agitator drive to the support structure using a 5/8 inch (15 mm) customer-supplied fastener set **[1109]**.

See Mounting: Design Loads, page 3 for open tank agitator support details.

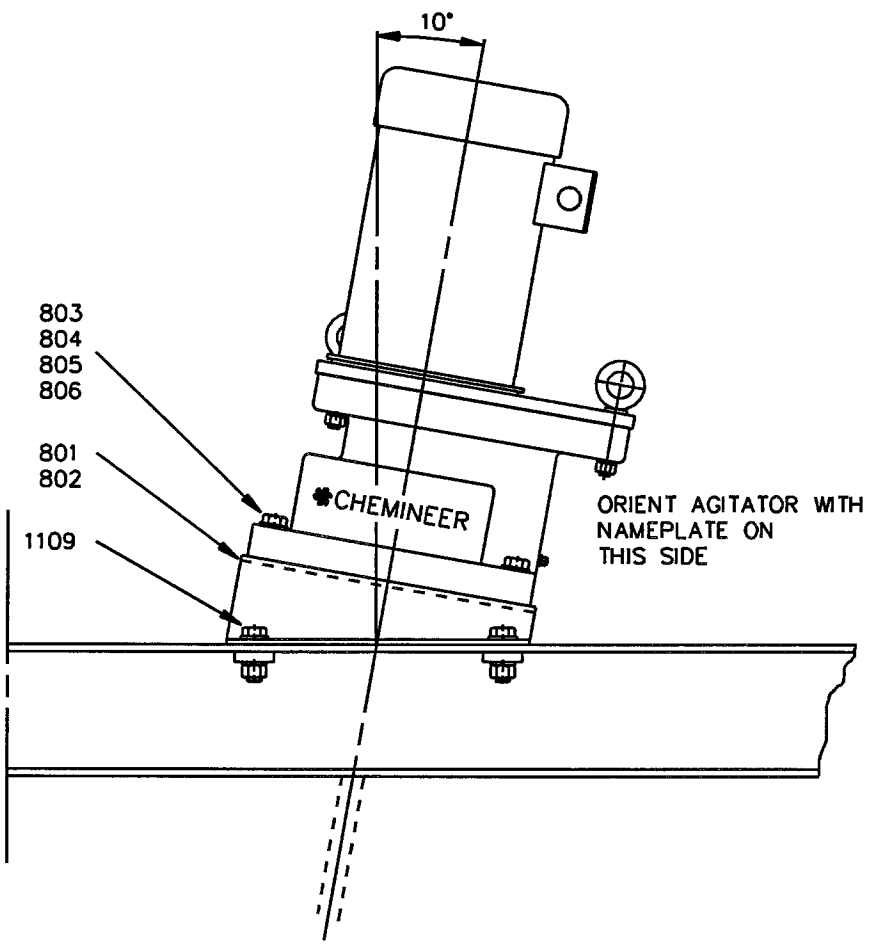

Figure 9: Angle Riser Mounting

OPTIONS: ANCHOR BOLTS

Stainless steel 3/4" x 10" long anchor bolts should be located on centers as shown in *Figure 1*. Mount agitator drive and torque anchor bolts to 131 ft-lb (178 nt-m).

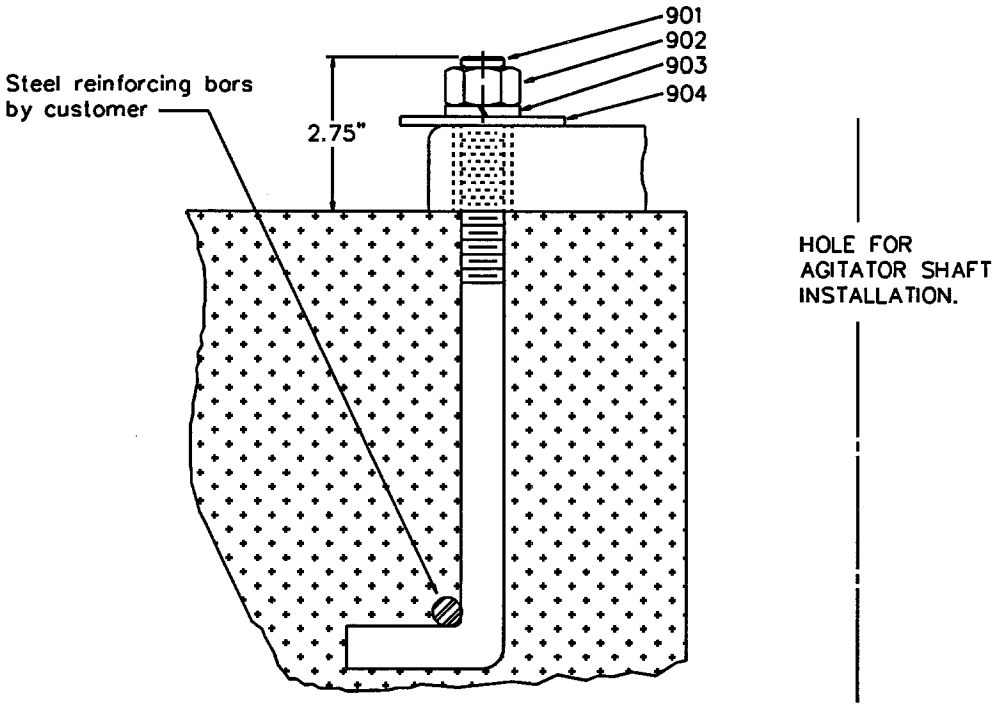

Figure 10: Anchor Bolt Assembly

OPTIONS: IN-TANK COUPLING

Optional in-tank couplings are available in two styles of construction, welded and removable. In all cases where assembly or disassembly of an agitator with an in-tank coupling is referred to in this manual, substitute flanged drive shaft **[403]** and/or flanged extension shaft **[404]** for all references to the agitator extension shaft **[400]**.

1. Assemble removable coupling halves **[408 & 413]**:

   Carefully clean all dirt and grease from the shaft and shaft coupling tapers. Make sure that both surfaces are completely dry and free from any burrs or nicks.

   Install the coupling keys **[409 & 414]** into the shaft keyway, making sure they are fully bottomed into the keyway. Slide the coupling on the tapered shaft end until both seat firmly against each other. Be sure that the coupling is not hung up on a key or cocked at an angle to the shaft.

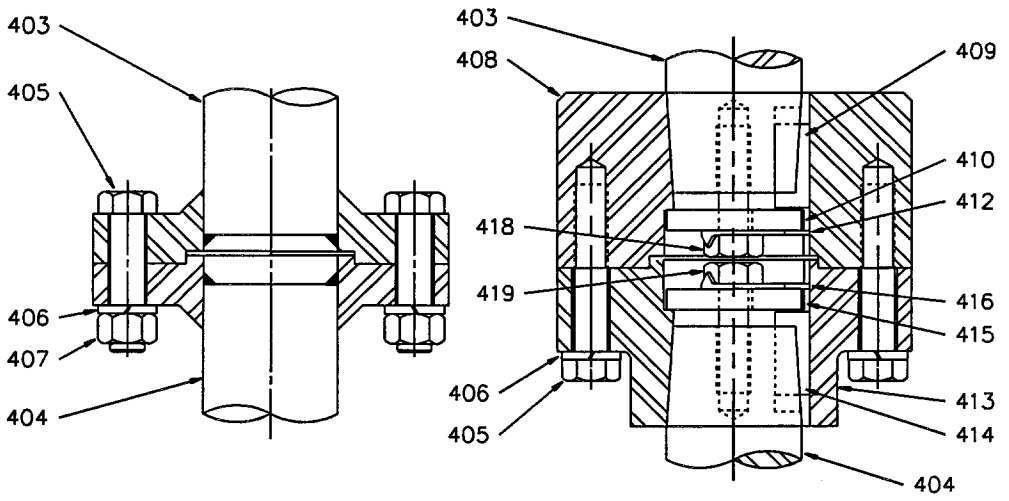

Figure 11: In-Tank Couplings

OPTIONS: IN-TANK COUPLING

(1.) Install coupling washers **[410 & 415]** and locking tabs **[412 & 416]**. Lubricate and install shaft bolts **[418 & 419]**. Torque carbon steel bolts to 27 ft-lb (37 nt-m); torque stainless steel bolts to 39 ft-lb (53 nt-m). Bend corners of locking tabs up around the heads of the shaft bolts.

NOTE: Do not apply lubricant or anti-seize compound to coupling taper. Shaft and tapered shaft coupling must be clean and dry.

2. Assemble couplings.

Connect the flanged extension shaft **[404]** to the flanged drive shaft **[403]**, making sure that the coupling faces are clean and free of any nicks or burrs. Lubricate and install coupling bolts **[405]**. Torque carbon steel bolts to 27 ft-lb (37 nt-m); torque stainless steel bolts to 39 ft-lb (53 nt-m).

AGITATOR

Your Chemineer CT agitator has been designed for your specific application. Proper operating procedures will allow maximum performance. The following list will aid in the safe operation of your unit.

- **Do not** operate the unit without reading and following the instructions of all tags and nameplates attached to the unit.

- **Do not** operate the unit in a fluid with a specific gravity or viscosity higher than that for which the unit was designed.

- **Do not** attempt to start a unit with the mixing impeller buried in solids or a "set up" fluid.

- **Do not** locate down comers, coils, baffles, or other vessel internals at less than 4 inches (100 mm) radial clearance from the agitator extension shaft and impellers.

- **Do not** make any changes in the field (i.e. motor horsepower, agitator speed, shaft length, impeller diameter, impeller width, etc.) without reviewing the change with *your local Chemineer office* or Chemineer's Parts and Field Service Department.

Agitators are commonly repainted to match plant color schemes or safety requirements. Your Chemineer CT agitator has been painted with a specially prepared chemical plant service paint. The paint has excellent chemical and water resistance, however, exposure to strong sun can lead to some chalking and color fading. Chalking and color fading will not diminish the chemical resistance of the paint. If you desire to repaint the unit, a coarse sandpaper should be used to abrade the surface and provide adherence for the new paint. Mask all nameplates and breather plug prior to painting.

MOTOR

Electric motors furnished on Chemineer CT agitators are guaranteed to deliver their rated output when properly installed and maintained.

Ample air circulation is very important to secure full performance and long life from an electric motor. Do not block off the suction inlets on fan cooled motors. Life of the motor will be decreased if its temperature exceeds its rating. The allowable temperature is stamped on the motor nameplate.

Prior to permanently wiring the electric motor:

- Check nameplate data on motor to assure that the available power supply agrees with the motor requirements. Protective devices should be the proper size and rating to safely carry the load and to interrupt the circuit on overloads.

- Check motor leads with connection diagrams on motor nameplate and/or conduit box so that the proper connections are made. All motors should be installed in accordance with the National Electric Code and local requirements.

- Check the gear drive output shaft rotation against the proper rotation indicated on the unit nameplate. For standard three-phase electric motors, the rotation is reversed by switching any two power leads.

- Check operating motor amperage against motor nameplate amperage.

The motor should start quickly and run smoothly. If the motor should fail to start or make abnormal noise, immediately shut motor off, disconnect it from the power supply, and investigate the cause. If the problem cannot be corrected, contact *your local Chemineer Office* for assistance.

GEAR DRIVE

The gear drive has been filled with lubricant at the factory and should not require changing for up to 5 years under normal operating conditions. See *Gear Drive Lubrication* in the *Lubrication & Maintenance* chapter for specific recommendations.

The gear drive will commonly operate at temperatures of 125°F to 175°F (52°C to 80°C). The surface temperature should in no case exceed 190°F (88°C). Should a temperature greater than 190°F exist, review the installation for unusually high ambient conditions, poor air circulation, or other unusual conditions.

MOTOR MAINTENANCE

The motor should be inspected at regular intervals. The interval depends upon the environment and nature of service. The following checklist requires only a few minutes. It may result in considerable savings if followed regularly:

- Cleanliness.

  Coatings of dirt, dust or grease slow the flow of heat from the motor to the atmosphere, and therefore may cause overheating. Wipe the motor clean and apply an inhibitor to rusted parts.

- Temperature.

  Allowable temperature is stamped on the motor nameplate. Overheating means overloading, shorts, or burned insulation.

- Moisture.

  Be sure motor is dry, inside and out.

- Noise.

  Unusual noises from a motor mean trouble. Noise may be the first indication of a faulty bearing, loose connection, etc.

MOTOR LUBRICATION

Some motor manufacturers do not use lubrication fittings. These motors have bearings which are prelubricated and sealed for life.

Lubricate motor bearings with motor at a standstill.

If the motor is equipped with a grease fitting, clean tip of fitting and remove grease drain plug.

Apply grease gun to the grease fitting and pump one to two full strokes.

Operate motor for 20 minutes before replacing plug.

Regreaseable motor bearings should be regreased:

- every 12 months when installed in clean dry locations
- every 6 months for hot and dusty locations

Use the following lubricants or equal:

Chevron Oil	SRI No. 2
Exxon	Unirex #2
Shell Oil Co.	Dolium R
Texaco Inc.	Premium RB
Mobil Oil	Mobilux® EP2

Do not mix petroleum and silicone greases in motor bearings.

GEAR DRIVE LUBRICATION

Other than periodic lubrication, no routine operational maintenance to the gear drive is needed. It is recommended, however, that you inspect the gear drive regularly for lubricant leaks, abnormal noise, vibration, etc.

Chemineer has complete facilities and parts available to remanufacture your CT gear drive. A gear drive exchange program is also available. Contact *your local Chemineer office* or the Factory for details.

A breather plug **[245]** is installed on top of the gear drive to allow pressures inside and outside the gear case to equalize. Do not paint over this plug or otherwise obstruct its function.

The gear drive has been filled with Mobilux EP023 grease at the factory. The life expectancy is 5 years under normal conditions.

Operating temperature in excess of 180°F (82°C), excessive moisture, dust, corrosive fumes and wide temperature fluctuations will require more frequent replacement of the lubricant.

For ambient temperature from 30F (-1°C) to 150°F (66°C) use Mobilux EP023 or equal.

For ambient temperature from -20°F (-29°C) to 50°F (10°C) use Mobilux EP Arctic or equal.

Lubricants are available from Chemineer. For ambient conditions above or below recommendations, *consult the Factory*.

GEAR DRIVE LUBRICATION

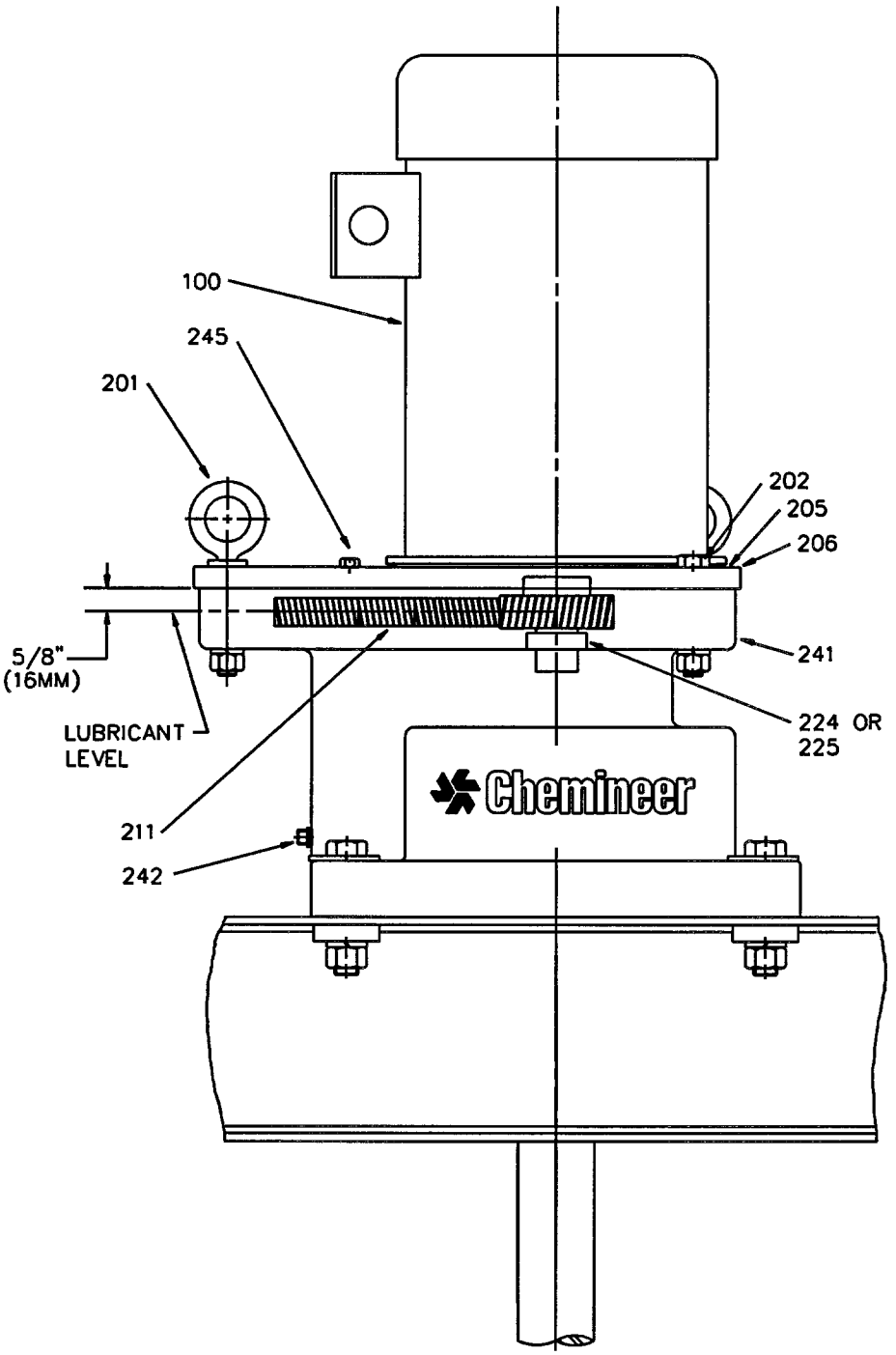

Figure 12: Gear Drive Lubrication

GEAR DRIVE LUBRICATION

1. Remove gear drive (*see page 22*).

2. Remove eyebolts **[201]**, hex bolts **[202]**, and rollpins **[205]** (*see Figure 14*). Lift motor **[100]**/cover plate **[206]** assembly straight up until the motor shaft clears the bearing **[224]** or bushing **[225]**, approximately 1-1/2 inches (38 mm).

3. Tip gear case over and remove plug **[242]** to drain lubricant.

4. Fill gear case until the grease level is 5/8 inch (16 mm) below the top of the gear case **[241]**. Turn gear **[211]** while filling to dispel air pockets. The lubricant capacity is 3 quarts (2.8 liters).

5. Assemble motor **[100]**/cover plate **[206]** assembly to gear case.

   Solvent clean the top surface of the gear case. Apply a 1/16 inch (1.5 mm) bead of Permatex Silicone Formagasket or equal to the top surface of the gear case, encircling the bolt holes.

   Install motor, lowering motor/cover plate slowly to engage the gear mesh. The motor shaft will pilot into the bearing **[224]** or bushing **[225]**.

   Drive rollpins **[205]** into position. Lubricate and install hex bolts **[202]** and eyebolts **[201]**; torque to 27 ft-lb (37 nt-m).

6. Remount gear drive (*see page 34*).

GEAR DRIVE DISASSEMBLY

If repair is done in the field, follow these disassembly instructions:

1. Remove gear drive.

   Lock out power and disconnect electrical service to the motor.

   Remove the four gear drive mounting bolts **[1109]**. Lift the gear drive **[200]** and shaft assembly up and block the agitator extension shaft in place.

   Remove the coupling bolts **[305]**. Move the gear drive to a suitable work area.

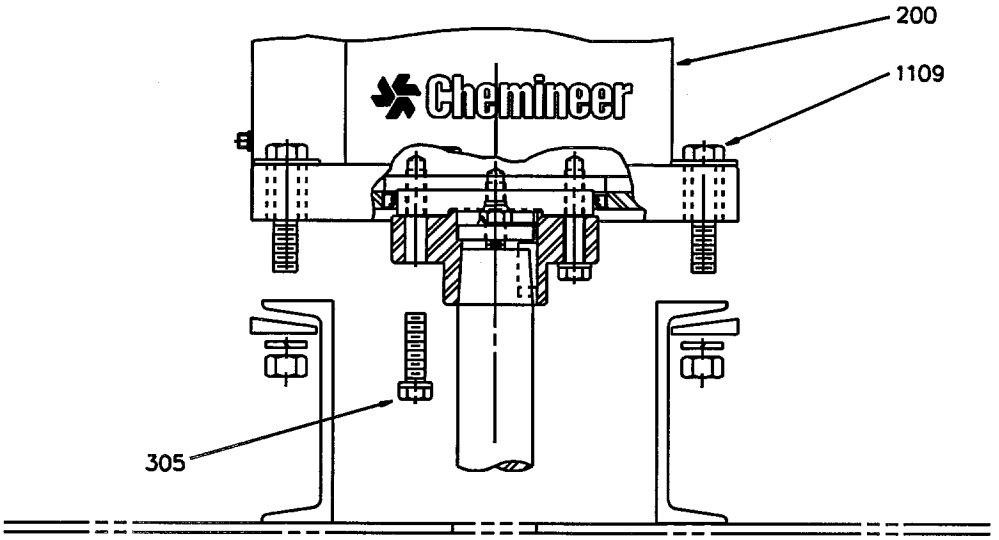

Figure 13: Remove Gear Drive

GEAR DRIVE DISASSEMBLY

2. Remove electric motor:

Remove eyebolts **[201]**, hex bolts **[202]**, and rollpins **[205]**. Lift motor **[100]**/cover plate **[206]** assembly straight up until the motor shaft clears the bearing **[224]** (gear drives with 56C frame motors) or bushing **[225]** (gear drives with 140TC or 180TC frame motors), approximately 1-1/2 inches (38 mm). Remove motor mounting bolts **[207]**. Remove motor.

Loosen set screws **[208]** in motor pinion **[210]**. Press pinion off motor shaft.

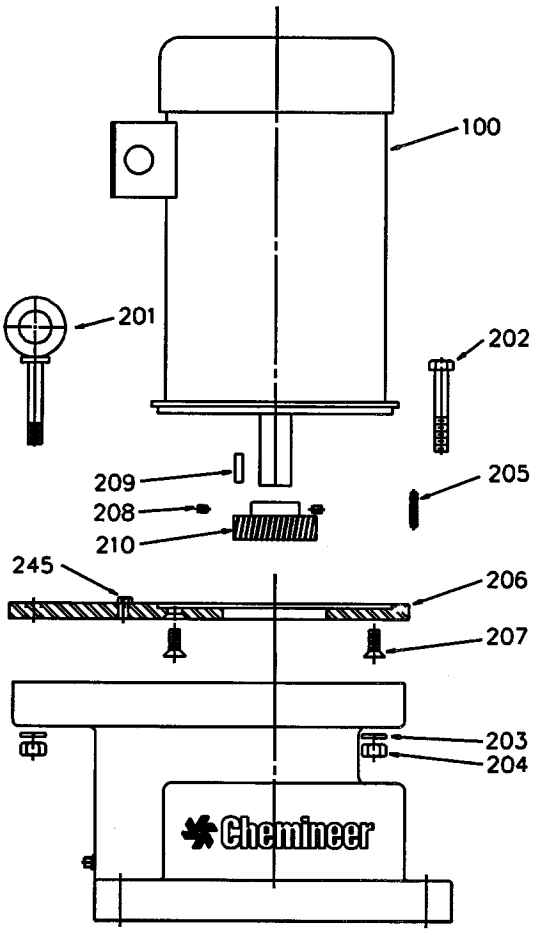

Figure 14: Remove Electric Motor

GEAR DRIVE DISASSEMBLY

NOTE: Whenever disassembled, it is recommended that all bearings, lip seals, and gaskets be replaced with new parts. Always replace gears in pairs.

3. Remove intermediate shaft assembly:

   Drain grease from gear case. Remove snap ring **[213]**, apply gear puller, and remove gear **[211]**.

   Remove snap ring **[215]** and pull intermediate shaft assembly **[212]** out of gear housing.

   Don't press bearing race **[219]** out of gear housing until the gear drive output shaft assembly has been removed.

   Inspect parts. If repair is needed, disassemble (*see page 26*).

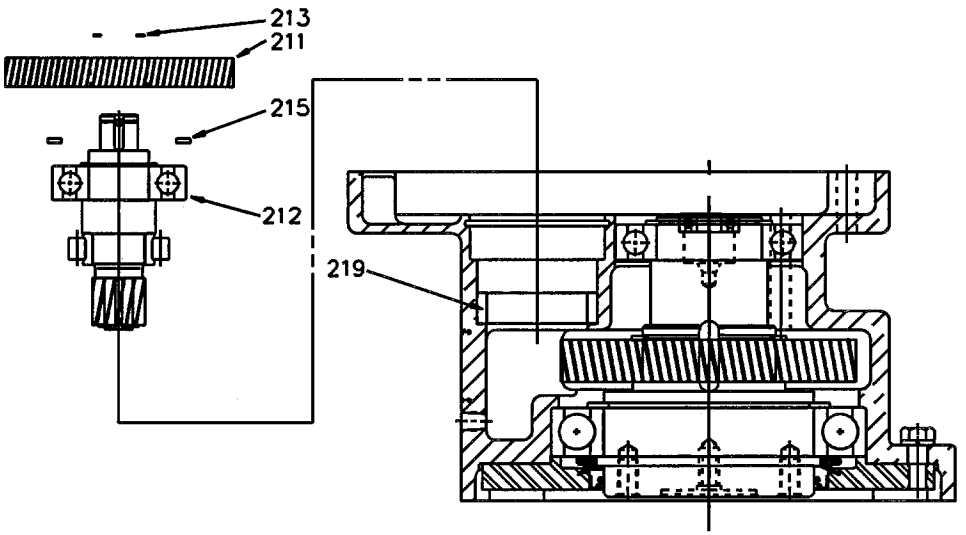

Figure 15: Remove Intermediate Shaft Assembly

GEAR DRIVE DISASSEMBLY

4. Remove gear drive output shaft assembly:

   Remove bearing cap bolts **[235]** and bearing cap assembly **[237]**.

   Install eyebolt **[201]** into the tapped hole in the center of the gear drive output shaft and pull the gear drive output shaft assembly **[223]** out of the gear housing.

   Inspect parts. If repair is needed, disassemble (*see page 27*).

   Press bearing race **[219]** out of gear housing.

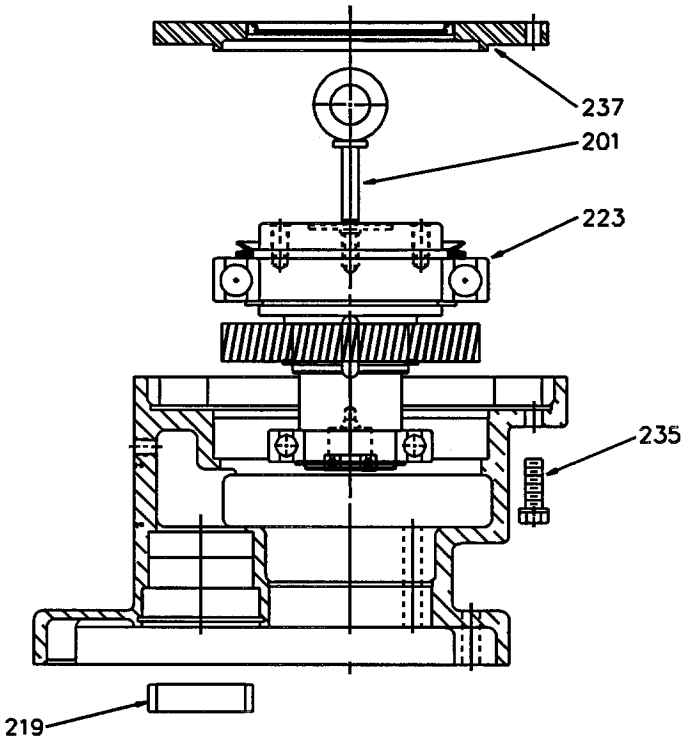

Figure 16: Remove Gear Drive Output Shaft Assembly

GEAR DRIVE DISASSEMBLY

5. Disassemble intermediate shaft assembly:

   Remove snap rings **[216 & 221]**.

   Press low speed pinion **[220]** and bearings **[217 & 219]** off intermediate shaft **[218]**.

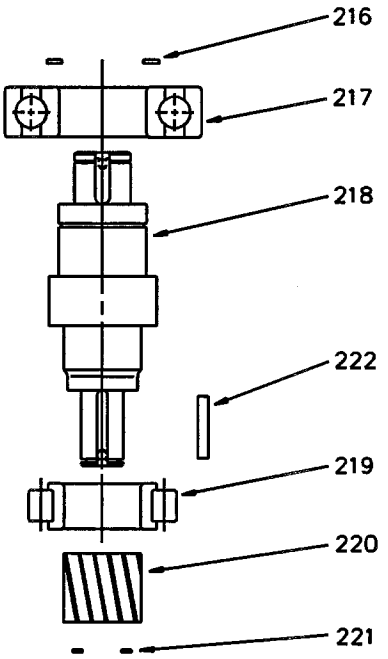

Figure 17: Disassembly Intermediate Shaft

GEAR DRIVE DISASSEMBLY

6. Disassemble gear drive output shaft assembly:

Remove V-ring **[234]** and snap ring **[226]**, press off bearing **[227]**.

Remove snap ring **[228]** press off low speed gear **[229]**.

Remove snap ring **[231]**, press off bearing **[232]**.

Pull bearing **[224]** (gear drives with 56C frame motors) or bushing **[225]** (gear drives with 140TC or 180TC frame motors) out of gear drive output shaft **[233]**.

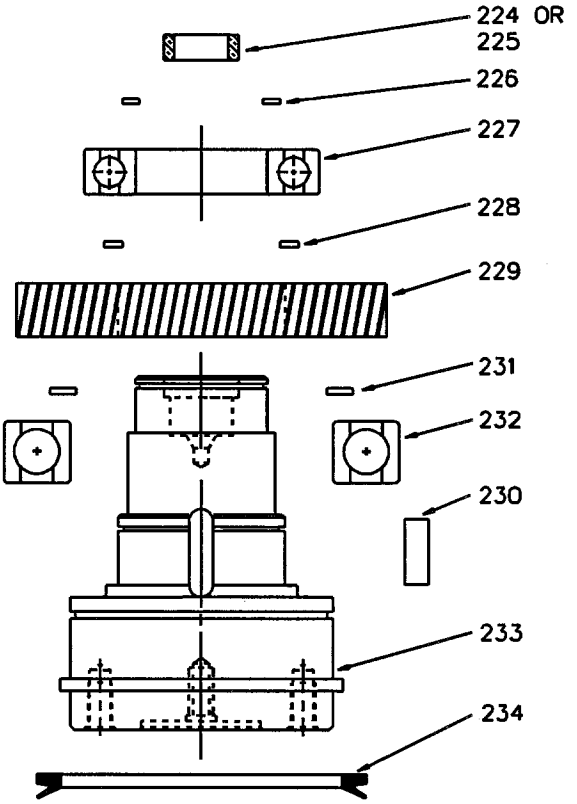

Figure 18: Disassembly Gear Drive Output Shaft

GEAR DRIVE ASSEMBLY

NOTE: It is recommended that all bearings, lip seals, and gaskets be replaced with new parts. Always replace gears in pairs.

1. Assemble gear drive output shaft assembly:

   Heat bearing **[232]** to 250°F (121°C) and press on the gear drive output shaft **[233]**. Install snap ring **[231]**, install key **[230]**.

   Heat low speed gear **[229]** to 250°F (121°C) and press on shaft. Install snap ring **[228]**.

   Heat bearing **[227]** to 250°F (121°C) and press on shaft. Install snap ring **[226]**.

   Press bearing **[224]** (gear drives with 56C frame motors) or bushing **[225]** (gear drives with 140TC or 180TC frame motors) into end of shaft. Install V-ring **[234]** on shaft.

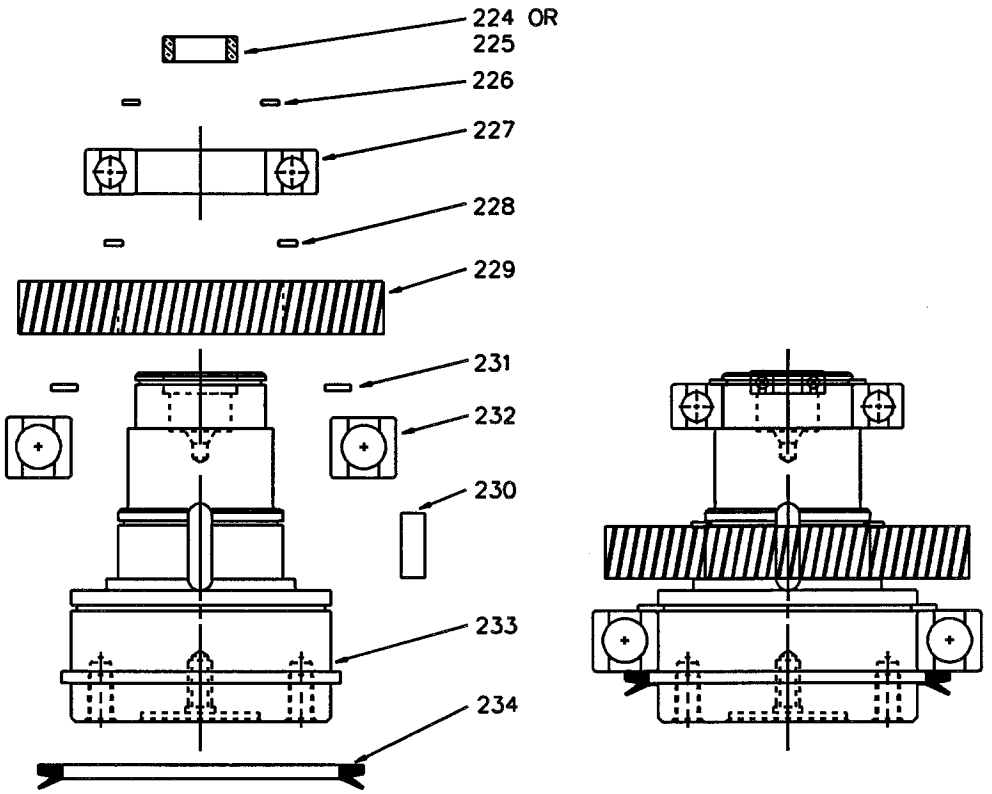

Figure 19: Gear Drive Output Shaft Assembly [223]

GEAR DRIVE ASSEMBLY

2. Assemble intermediate shaft assembly:

   Press bearing **[219]** on the intermediate shaft **[218]**.

   Install key **[222]**, heat low speed pinion **[220]** to 300°F (149°C) and press on shaft. *(NOTE: Assemble low speed pinion so that the part number is opposite the shaft shoulder.)*

   Install snap ring **[221]**. Heat bearing **[217]** to 250°F (121°C) and press on shaft.

   Install snap ring **[216]**.

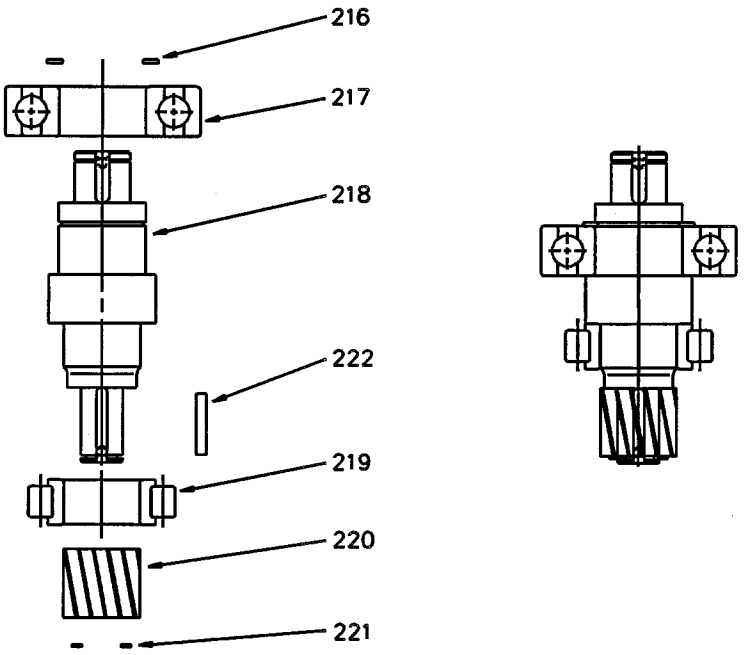

Figure 20: Intermediate Shaft Assembly [212]

GEAR DRIVE ASSEMBLY

3. Assemble bearing cap assembly:

   Clean bearing cap **[238]**. Coat outside diameter of lip seal **[239]** with Permatex Hightack or equal.

   Install lip seal **[239]** with the spring facing the bearing. Apply a coating of grease to the seal lip.

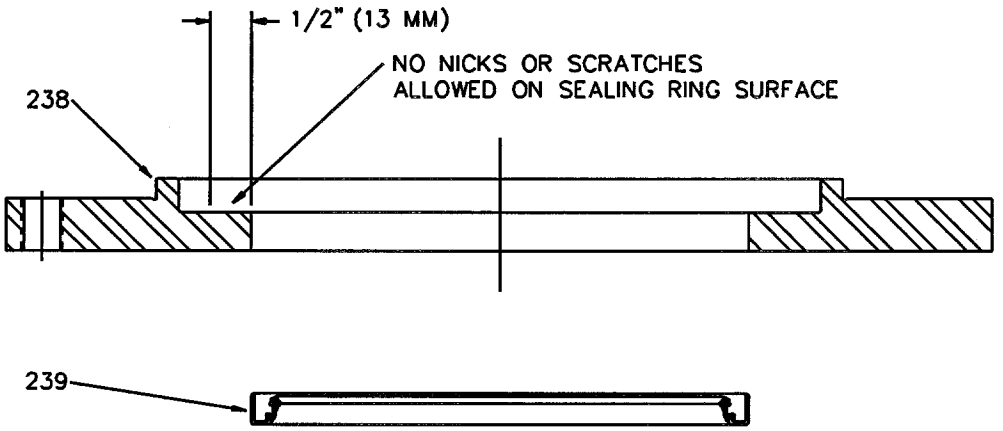

Figure 21: Bearing Cap Assembly [237]

GEAR DRIVE ASSEMBLY

4. Assemble motor/cover plate:

Install key **[209]** into motor shaft keyway. *(NOTE: Key must be 13/16 inch (20.6 mm) long for 56C and 140TC frame motors and 11/16 inch (17.5 mm) long for 180TC frame motors.)*

Back out set screws **[208]** in motor pinion **[210]**. Heat pinion to 300°F (149°C) and press on motor shaft. *Note the dimensions in the figure below for correct location.* Allow pinion to cool, then tighten set screws. Torque to 30 in-lb (3.4 nt-m).

Solvent clean motor face **[100]** and both sides of the cover plate **[206]**. Apply a 1/16 inch (1.5 mm) bead of Permatex Silicone Formagasket or equal to the mounting face of the motor, encircling the mounting holes. Assemble the cover plate to the motor using motor mounting bolts **[207]**; lubricate and install bolts; torque to 16.5 ft-lb (22 nt-m) for 3/8 inch bolts and 27 ft-lb (37 nt-m) for 1/2 inch bolts.

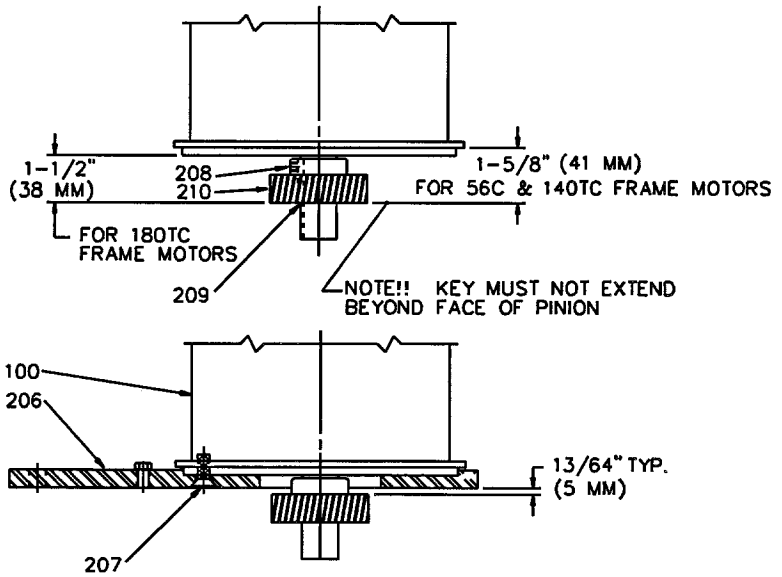

Figure 22: Assembly Motor/Cover Plate

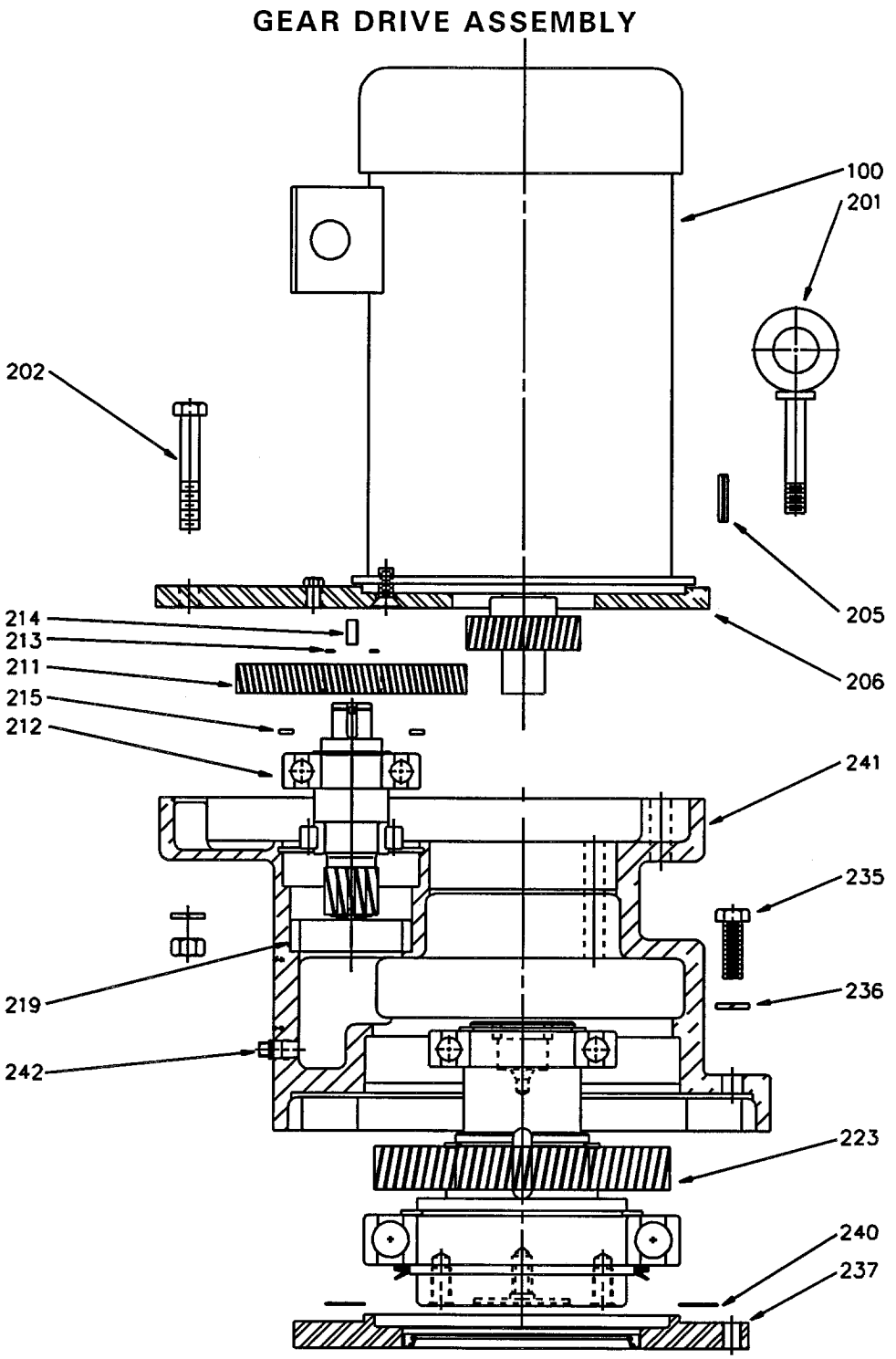

Figure 23: Assembly Gear Drive

GEAR DRIVE ASSEMBLY

5. Assemble gear drive:

Heat gear case housing **[241]** to 200°F (93°C); apply Locktite to bearing race **[219]** and install. Install intermediate shaft assembly **[212]**. Install snap ring **[215]**.

Turn gear housing over (square flange up). Lower the gear drive output shaft assembly **[223]** into the housing using eyebolt **[201]** threaded into the tapped hole in the center of the shaft. *(NOTE: It may be necessary to rotate the intermediate shaft to align gear mesh while lowering shaft assembly into place.)* Apply a coating of grease to the V-ring lip.

Apply Permatex Hightack or equal to the bearing cap assembly **[237]** and gasket **[240]**. Assemble the bearing cap assembly to the gear case using bearing cap bolts **[235]** and spring lockwashers **[236]**. Lubricate and install bolts; torque to 27 ft-lb (37 nt-m).

Turn gear case over (motor end up). Heat gear **[211]** to 300°F (149°C). Install key **[214]** into intermediate shaft keyway. Press gear on shaft. Install snap ring **[213]**.

Fill gear case until the grease level is 5/8 inch (16 mm) below the top of the gear case **[241]**. Turn gear while filling to dispel air pockets. The approximate capacity is 3 quarts (2.8 liters).

Solvent clean the top surface of the gear case. Apply a 1/16 inch (1.5 mm) bead of Permatex Silicone Formagasket or equal to the top surface of the gear case, encircling the bolt holes.

Install motor, lowering motor **[100]**/cover plate **[206]** slowly to engage the gear mesh. The motor shaft will pilot into the bearing **[224]** or bushing **[225]**.

Drive rollpins **[205]** into position. Lubricate and install hex bolts **[202]** and eyebolts **[201]**; torque to 27 ft-lb (37 nt-m).

GEAR DRIVE ASSEMBLY

6. Remount gear drive:

   Connect the agitator extension shaft **[400]** to the gear drive output shaft **[233]**, making sure that the coupling faces are clean and free of any burrs and nicks. Lubricate and install coupling bolts **[305]**; torque to 27 ft-lb (37 nt-m).

   Install the agitator drive on the support structure using a 5/8 inch (15 mm) customer-supplied fastener set **[1109]**.

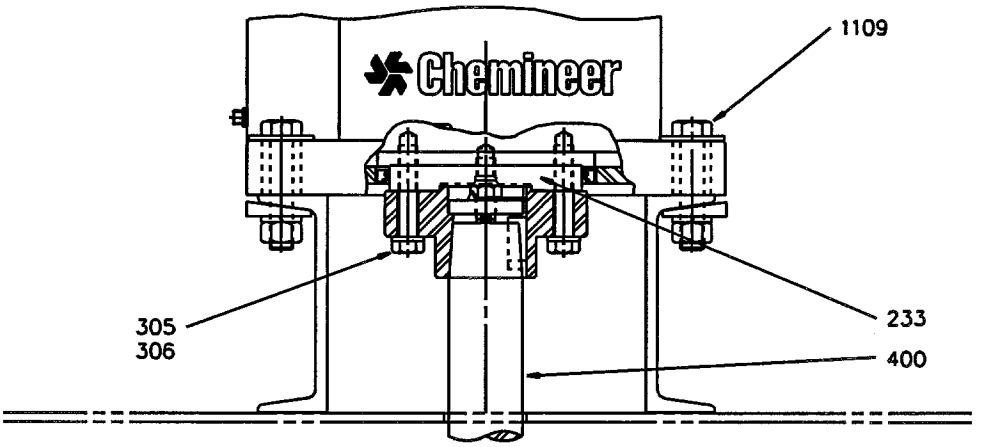

Figure 24: Remount Gear Drive

CTD AGITATOR ITEM NUMBERS

Item #	Description	Qty.
Gear Drive		
100	motor	1
200	gear drive	1
201-001	eyebolt 1/2-13 x 3-1/4" lg	2
202-001	hex bolt 1/2-13 x 3" lg	2
203-001	spring lockwasher 1/2"	4
204-001	hex nut 1/2-13	4
205-001	rollpin 1/4 x 1-1/4" lg	2
206-001	cover plate 56C, 140TC	1
-002	cover plate 180TC	1
207-001	motor mounting bolts 3/8-16 x 1" lg	4
-002	motor mounting bolts 1/2-13 x 1" lg	4
208-001	set screws #10-32 x 1/2" lg	2
-002	set screws #1/4-20 x 3/8" lg	2
209-001	key 3/16" sq x 13/16" lg	1
-002	key 1/4" sq x 11/16" lg	1
210-001	motor pinion 5/8 bore 52T	1
-002	motor pinion 1-1/8 bore 52T	1
-003	motor pinion 5/8 bore 28T	1
-004	motor pinion 1-1/8 bore 28T	1
-005	motor pinion 7/8 bore 52T	1
-006	motor pinion 7/8 bore 28T	1
211-001	gear 95T	1
-002	gear 119T	1
212-001	intermediate shaft assembly	1
-002	intermediate shaft assembly	1
213-001	snap ring	1
214-001	key 1/4" sq x 9/16" lg	1
215-001	snap ring	1
216-001	snap ring	1
217-001	bearing	1
218-001	intermediate shaft	1
219-001	bearing	1
220-001	low speed pinion 21 T	1
-002	low speed pinion 28 T	1
221-001	snap ring	1
222-001	key 3/16" sq x 1-1/8" lg	1

CTD AGITATOR ITEM NUMBERS

Item #	Description	Qty.
223-001	gear drive output shaft assy	1
-002	gear drive output shaft assy	1
224-001	bearing	1
225-001	bushing 1-1/8 bore	1
-002	bushing 7/8 bore	1
226-001	snap ring	1
227-001	bearing	1
228-001	snap ring	1
229-001	low speed gear 127 T	1
-002	low speed gear 119 T	1
230-001	key 1/2" sq x 1-1/16" lg	1
231-001	snap ring	1
232-001	bearing	1
233-001	gear drive output shaft	1
234-001	V-ring	1
235-001	bearing cap bolt 1/2-13 x 1-1/4"lg	6
236-001	spring lockwasher 1/2"	6
237-001	bearing cap assembly	1
238-001	bearing cap	1
239-001	lip seal	1
240-001	gasket	1
241-001	gear case	1
242-001	drain plug 1/4" NPT	1
243-001	drive pin 2 x 3/16" lg	4
244-001	nameplate	1
245-001	breather plug 1/8" NPT	1

Agitator Drive

300	coupling assembly	1
301-001	shaft bolt 1/2-13 x 1-1/2"lg	1
302-001	locking tab 1-1/2"	1
-002	locking tab 2"	1
303-001	coupling washer 1-1/2"	1
-002	coupling washer 2"	1
304-001	tapered shaft coupling half 1-1/2"	1
-002	tapered shaft coupling half 2"	1
305-001	coupling bolt 1/2-13 x 2-1/2" lg	6

CTD AGITATOR ITEM NUMBERS

Item #	Description	Qty.
306-001	coupling key 3/8" sq x 7/8" lg	1
-002	coupling key 1/2" sq x 1-3/16" lg	1
307-001	spring lockwasher	6
400	agitator extension shaft assembly	1
401-001	extension shaft 1-1/2"	1
-002	extension shaft 2"	1
402-001	pin key 3/8"	1
-002	pin key 1/2"	1
403-001	drive shaft weld coupling 1-1/2"	1
-002	drive shaft weld coupling 2"	1
-003	drive shaft assy rem cplg 1-1/2"	1
-004	drive shaft assy removable cplg 2"	1
404-001	flanged ext shaft weld cplg 1-1/2"	1
-002	flanged ext shaft weld cplg 2"	1
-003	flanged ext shaft rem cplg 1-1/2"	1
-004	flanged ext shaft rem cplg 2"	1
405-001	coupling bolts 1/2-13 x 2-1/4" lg	6
-002	coupling bolts 1/2-13 x 2" lg	6
406-001	spring lockwashers 1/2"	6
407-001	hex nut 1/2-13	6
408-001	tapered shaft coupling 1-1/2"	1
-002	tapered shaft coupling 2"	1
409-001	coupling key 3/8" sq x 7/8" lg	1
-002	coupling key 1/2" sq x 1-3/16" lg	1
410-001	coupling washer 1-1/2"	1
-002	coupling washer 2"	1
411-001	drive shaft tapered end 1-1/2"	1
-002	drive shaft tapered end 2"	1
412-001	locking tab 1-1/2"	1
-002	locking tab 2"	1
413-001	tapered shaft coupling 1-1/2"	1
-002	tapered shaft coupling 2"	1
414-001	coupling key 3/8" sq x 7/8" lg	1
-002	coupling key 1/2" sq x 1-3/16" lg	1
415-001	coupling washer 1-1/2"	1
-002	coupling washer 2"	1
416-001	locking tab 1-1/2"	1
-002	locking tab 2"	1

CTD AGITATOR ITEM NUMBERS

Item #	Description	Qty.
417-001	extension shaft 1-1/2"	1
-002	extension shaft 2"	1
418-001	shaft bolt 1/2-13 x 1-1/2" lg	1
419-001	shaft bolt 1/2-13 x 1-1/2" lg	1

Impellers

500-000	impeller assembly	
501-001	impeller assembly P-4	
502-001	impeller assembly S-4	
503-001	impeller assembly HE-3	
504-001	hub	
505-001	square head set screw	
506-001	extension blades	
507-001	blade bolts	
508-001	blade washers	
509-001	blade nuts	
510-001	stabilizer fin	4
511-001	stabilizer bolt	8
512-001	stabilizer washer	8
513-001	stabilizer nut	8

Angle Risers

800	angle riser assembly	1
801-001	R.H. angle riser	1
802-001	L.H. angle riser	1
803-001	hex bolts 5/8-11 x 3" lg	4
804-001	hex nuts 5/8-11	4
805-001	flatwashers 5/8"	8
806-001	spring lockwashers 5/8"	4

Anchor Bolts

900	anchor bolt assembly	4
901-001	anchor bolts 3/4-10 x 10" lg	4
902-001	hex nuts 3/4-10	4
903-001	spring lockwashers 3/4"	4
904-001	flatwashers 3/4"	4

Chemineer, Inc.
A Unit of Robbins & Myers, Inc.

© Chemineer, Inc. 2001