ASHCROFT®

Type 1279 Duragauge® Pressure Gauge Available With *PLUS!*™ Performance Option

- *Solid front case design, field convertible to hermetically sealed or liquid filled style*
- *Pressure ranges from vacuum — 30,000 psi.*
- *Select from various socket and Bourdon tube materials.*
- *Micrometer adjustable pointer.*
- *400 Series stainless steel movement wears better for longer life*
- *Teflon-coated pinion for longer life*
- *Patented Duratube™ with welded-tube construction controls stresses for longer life*
- *PLUS!™ Performance Option:*
  - *Liquid-filled performance in a dry gauge*
  - *Fights vibration and pulsations without iquid-filled headaches*
  - *Order as option XLL*

The Ashcroft® Duragauge® pressure gauge is the finest production gauge on the market for industrial use where precise indications are required. The product line offers a wide variety of case styles, Bourdon tubes and pressure ranges to meet your application needs .

With the component combinations available in the Duragauge gauge line, over ten million variations are possible to serve the needs of all types of industries, including process, power, nuclear, aerospace and cryogenics.

PRODUCT SPECIFICATIONS

Model Number: 1279

Accuracy: ½% full scale (Grade 2A, ASME B40.100)

Ranges: Vac., compound to 30,000 psi

Dial Size: 4½″ diameter

Case Material: Black phenolic, solid front

Weather Protection: Dry Case: IP54
Liquid filled or hermetically sealed case: IP 65

Ring: Threaded reinforced black polypropylene

Window: Glass

Dial: Aluminum, white background, black figures and intervals.

Pointer: Micrometer adjustable

Movement: Rotary, 400 SS, Teflon® coated pinion gear and segment

Bourdon Tube and Socket: C510 Phos. bronze/brass brazed (A)
316L SS/steel (R)
316L SS/316L SS (S)
K Monel/ Monel (P)

Connection Size: ¼″, ½″ NPT

Connection Location: Lower or back

OPTIONAL FEATURES

Fill: L-Glycerin-Standard
XGV-Silicone-Optional
XGX-Halocarbon-Optional

***PLUS!* Performance:** XLL

Hermetically Sealed, IP65: H

Flush Mounting Ring: X56

Receiver Gauge: XPR

Shatter Proof Glass Window: XSG

Acrylic Window: XPD

Red Set Hand: XSH

Maximum Pointer: XEP

STANDARD RANGE TABLE*

Pressure – psi

Range	Figure interval	Minor Graduation
0/15	1	0.1
0/30	5	0.2
0/60	5	0.5
0/100	10	1
0/160	20	2
0/200	20	2
0/300	50	2
0/400	50	5
0/600	50	5
0/800	100	10
0/1000	100	10
0/1500	200	20
0/2000	200	20
0/3000	500	20
0/5000	500	50
0/6000	500	50
0/10,000	1000	100
0/20,000	2000	200
0/30,000	5000	200

Compound

Range	Figure Interval		Minor Grads	
	in Hg	psi	in Hg	psi
30″ Hg/15 psi	5	3	0.5	0.2
30″ Hg/30 psi	10	5	1	0.5
30″ Hg/60 psi	10	10	1	1
30″ Hg/100 psi	10	10	2	1
30″ Hg/150 psi	10	20	5	2
30″ Hg/200 psi	30	20	5	2
30″ Hg/300 psi	30	50	5	2

Vacuum

Range	Figure Interval	Minor Grads
30/0 in. Hg	5 in	0.2 in
34/0 ft H_2O	5 ft	0.5 ft

*Full standard and metric equivalent range table available on our web site.

ISO 9001
REGISTERED FIRM
BULLETIN DU-1 1279

All specifications are subject to change without notice.
All sales subject to standard terms and conditions.
© Ashcroft Inc. 2011 09/11

Ashcroft Inc., 250 East Main Street, Stratford, CT 06614 USA
Tel: 203-378-8281 • Fax: 203-385-0408
email: info@ashcroft.com • www.ashcroft.com

Type 1279 Duragauge® Pressure Gauge Available With *PLUS!™* Performance Option

TYPE 1278M SERIES FLUSH MOUNTING RING

Used to flush mount gauge case Type 1279(*)S. Standard finish is black; polished stainless steel finish is available at an extra charge.

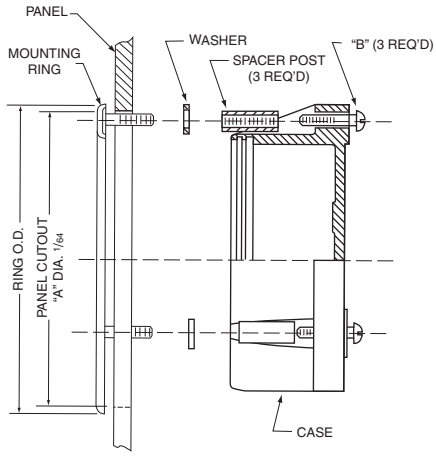

GAUGE SIZE	RING O.D.	"A" DIA.	"B" Size of 3 Screws	"C" Size of Washers
4½	6.000 (152)	5⅝ (148)	#10-24 x 1⅝	7/16 x 17/64 x ⅝

Dimensions

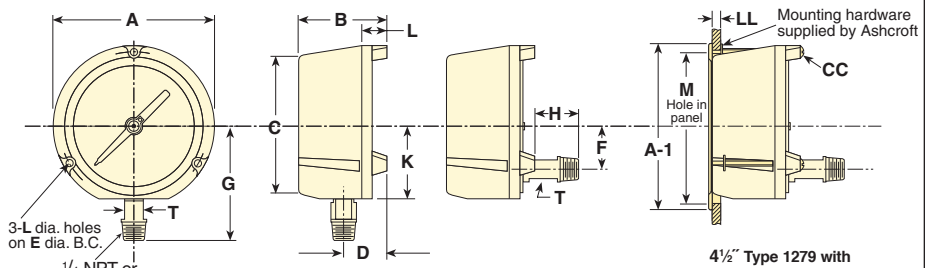

4½″ Lower Connection

4½″ Back Connection

4½″ Type 1279 with Type 1278M flush mounting ring

Dial Size Inches	A	B	C	D	E	F	G	H	K	L	T	V	Weight (lbs)
4½	5.81 (147.6)	3.36 (85.3)	5.07 (128.7)	1.06 (40.6)	5.375 (137)	1.62 (41.2)	4.08 (103.7)	.73 (18.4)	2.62 (66.6)	.22 (5.5)	.62 (15.7)	2.625 (67)	2½

Table A - Case selection & mounting

Dial Size (in)	Ordering Code	Case Type	Case: Material Finish	Ring: Style Material Finish	Mounting / Connection	
4½	(45)	1279[1]	Phenolic (Black)	Threaded Reinforced Polypropylene - Black	Stem – Surface – Flush –	Lower or back Lower or back Back: Specify X56

Table B - System Location and Connection Bourdon Tube & Tip Material[2] (all joints TIG welded except code "A")	Socket Material[2]	Tube & Socket Code	Case Style Code	NPT Conn. & Code	Conn. Location & Code	Range Selection Limits (psi)
C510 Grade A Phosphor Bronze Tube, Brass Tip, Silver Brazed	Brass	(A)	(S) Solid Front	(02) ¼ (04) ½[4]	Lower (L) Back (B)	Vac./1000
316 stainless steel	1018 steel	(R)	(S) Solid Front			Vac./20,000
316 stainless steel	316 SS	(S)	(S) Solid Front			Vac./20,000
K 500 Monel®[3]	Monel 400	(P)	(S) Solid Front			Vac./30,000

NOTES:

(1) Liquid-fillable or hermetically sealed when kit 101A202-01 (lower) or kit 101A203-01 (back) is ordered.
(2) For selection of the correct Bourdon system material see the media application table.
(3) Use on applications where NACE MR-01-75 is specified for selection of the correct Bourdon system material.
(4) 30,000 psi range supplied with ¼ high pressure connection, ½ NPT optional.

HOW TO ORDER:

45 1279 RS* 04L XXX 0/2000 psi

From Table A, Dial Size: 4½″ : 45
From Table A, Case Type Number: 1279 — 1279
From Table B, Bourdon tube and socket: — RS*
From Table B, Connection: ¼ NPT (02), ½ NPT (04), Lower (L), Back (B) — 04L
From Optional Features: — XXX
From Range Table: 2000 psi — 0/2000 psi

(*) "S" denotes solid front case design
If glycerin filled case, substitute "L" instead of "S"

All specifications are subject to change without notice.
All sales subject to standard terms and conditions.
© Ashcroft Inc. 2011 09/11

Ashcroft Inc., 250 East Main Street, Stratford, CT 06614 USA
Tel: 203-378-8281 • Fax: 203-385-0408
email: info@ashcroft.com • www.ashcroft.com