KEYSTONE

Resilient seated butterfly valves
AR1 (wafer) (2" to 36"), 2" to 12", to 175 psi
AR2 (lug) (2" to 24"), 14" to 36", to 150 psi

Features and Benefits

- Triple function resilient seat helps provide bi-directional drop-tight shut-off, designed to totally isolate the valve body and stem from the line media.
- Molded-in O-ring seat design serves as flange seals, eliminating the need for gaskets between the flanges and the valve.
- Unique dovetail seat retention design allows for convenient and economical field replacement.
- Superior one-piece through shaft design provides high strength and positive disc control.
- Internal shaft seal is designed to prevent external media from entering valve and it also adjusts for pressure and shaft rotation.
- Heavy-duty, corrosion resistant top bushing delivers upper stem support, absorbs actuator side-loading and extends valve cycle life.
- Polished disc edge helps ensure optimal performance and maximum seat life.
- Stainless steel torque plug (2" to 12"), disc screws (14" to 20") and taper pins (24" to 36") provide positive leak-proof connections while allowing for quick and easy disassembly.
- One-piece body with extended neck allows clearance for flanges and insulation.
- Each valve is factory-tested to 110 percent of the manufacturer's pressure rating.

General Application

Ideally suited for many high performance applications, such as fire protection, water treatment, cooling systems, food and beverage and bulk product handling. Consult your sales representative for appropriate materials and specific services.

Technical Data

Size Range:
Figure AR1 (wafer style) 2" to 36"
Figure AR2 (lugged style) 2" to 24"

Flange Standard:
ANSI Class 125/150

(Consult your sales representative for additional drilling standards.)

tyco Flow Control

Keystone is either a trademark or registered trademark of Tyco International Services AG or its affiliates in the United States and/or other countries. All other brand names, product names, or trademarks belong to their respective holders.

Copyright © 2010 Tyco Flow Control. All rights reserved.

Parts and Materials

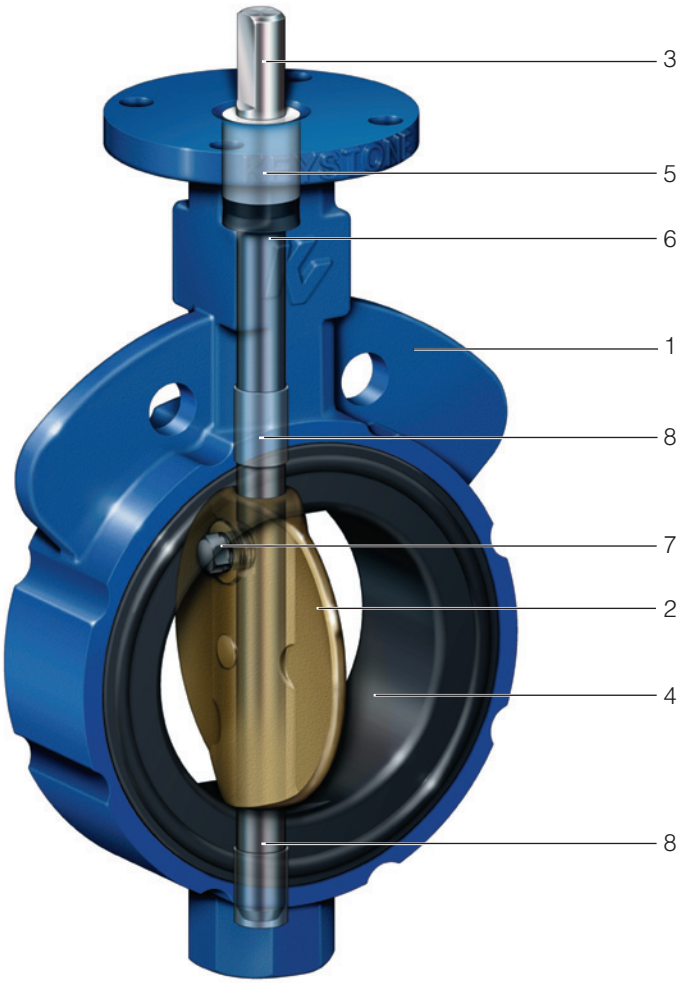

Materials

Part	Standard Material	Material Specification	Optional Material
1 Body	Cast iron Ductile iron	ASTM A-126, Class B ASTM A-395 GR 60/40/18	Carbon steel Stainless steel
2 Disc	Ductile iron Aluminum bronze 316 Stainless steel	ASTM A-536 GR 65/45/12 ASTM B-148, UNS C95200 Grade A ASTM A-743, CF8M	
3 Stem	316 Stainless steel (2" to 12") 18-8 Stainless steel (14" to 20") 17-4 PH Stainless steel (24" to 36") (2" to 20")	ASTM A-276 UNS S31600 ASTM A-276 UNS S30400 ASTM A-564 UNS S17400 ASTM A-108 UNS G10450	 Phosphate treated steel
4 Seat	NBR food grade (0°F to 212°F) EPDM food grade (-40°F to 250°F)		Fluoroelastomer (FKM) White NBR
5 Upper stem bushing	Polyester (2" to 20") Bronze (24" to 36")		
6 Stem packing	NBR		
7 Torque plug (2" to 12") Disc screws (14" to 20") Taper pins (24" to 36")	316 Stainless steel 316 Stainless steel 17-4 PH Stainless steel	ASTM A-276 UNS S31600 condition A ASTM F-593 Group 2 condition CW1 ASTM A564 UNS S17400 H1075	
8 Bearings (2" to 12")	Sintered metal		

Copyright © 2010 Tyco Flow Control. All rights reserved.

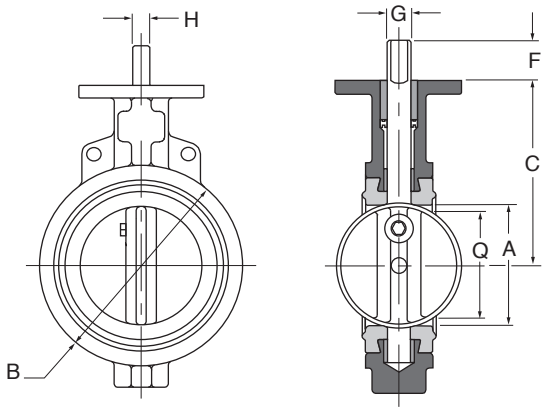

Figure AR1 Wafer

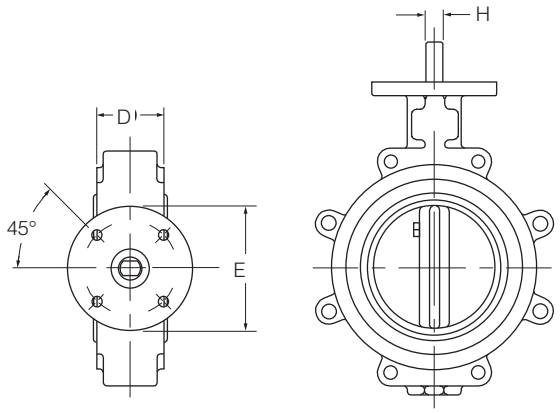

Figure AR2 Lugged

Figure AR1 – Dimensions (inches)

Size	A	B	C	D	E	F	G	H	Q	Key	Top Plate Drilling Bolt Circle	No. Holes	Hole Dia.	Weight (lbs)	Adapt. Code
2	2	4 1/8	5 1/2	1 5/8	4	1 1/4	9/16	3/8	1 3/8	N/A	3 1/4	4	7/16	6.3	BAB
2 1/2	2 1/2	4 5/8	6	1 3/4	4	1 1/4	9/16	3/8	2 1/16	N/A	3 1/4	4	7/16	8.5	BAB
3	3	5 1/8	6 1/4	1 3/4	4	1 1/4	9/16	3/8	2 9/16	N/A	3 1/4	4	7/16	10.0	BAB
4	4	6 3/8	7	2	4	1 1/4	5/8	7/16	3 5/8	N/A	3 1/4	4	7/16	14.0	BAC
5	5	7 3/8	7 1/2	2 1/8	4	1 1/4	3/4	1/2	4 3/4	N/A	3 1/4	4	7/16	18.0	BAD
6	5 3/4	8 1/2	8	2 1/8	4	1 1/4	3/4	1/2	5 1/2	N/A	3 1/4	4	7/16	22.0	BAD
8	7 3/4	10 11/16	9 1/2	2 1/2	6	1 1/4	7/8	5/8	7 1/2	N/A	5	4	9/16	38.0	CAE
10	9 3/4	13	10 3/4	2 1/2	6	2	1 1/8	N/A	9 19/32	1/4 x 1/4	5	4	9/16	51.0	CAF
12	11 3/4	14 13/16	12 1/4	3	6	2	1 1/8	N/A	11 9/16	1/4 x 1/4	5	4	9/16	71.0	CAF
14	13 1/4	16 3/4	12	3	6	3	1 3/8	N/A	13 1/8	5/16 x 5/16	5	4	9/16	114.0	CAG
16	15 1/4	19 1/4	12 61/64	4	6	3	1 5/8	N/A	15	3/8 x 3/8	5	4	9/16	193.0	CAH
18	17 1/4	21 1/2	14 1/2	4 1/4	8	4 1/4	1 7/8	N/A	16 7/8	1/2 x 3/8	6 1/2	4	13/16	222.0	DAJ
20	19 1/4	23 3/4	15 7/8	5	8	4 1/4	1 7/8	N/A	18 3/4	1/2 x 3/8	6 1/2	4	13/16	315.0	DAJ
24	23 1/4	28 1/4	19 1/2	5 15/16	8	4 1/4	1 7/8	N/A	22 5/8	1/2 x 3/8	6 1/2	4	13/16	506.0	DAJ
30	29 1/4	34 5/8	23	6 9/16	8	4 1/4	2 1/4	N/A	28 11/16	1/2 x 3/8	6 1/2	4	13/16	610.0	DAK
36	35 1/4	41 1/4	27 3/4	7 7/8	8	5 1/4	2 7/8	N/A	34 1/2	3/4 x 1/2	6 1/2	4	13/16	1,185.0	DAV

Figure AR2 – Dimensions (inches)

Size	A	B	C	D	E	F	G	H	Q	Key	Top Plate Drilling Bolt Circle	Bolt Holes	No. Hole Dia.	Tapped Lug Data Hole Circle	Bolt Holes	No. Tap	Weight (lbs)	Adapt. Code
2	2	4 1/8	5 1/2	1 5/8	4	1 1/4	9/16	3/8	1 3/8	N/A	3 1/4	4	7/16	4 3/4	4	5/8 - 11 UNC	7.0	BAB
2 1/2	2 1/2	4 5/8	6	1 3/4	4	1 1/4	9/16	3/8	2 1/16	N/A	3 1/4	4	7/16	5 1/2	4	5/8 - 11 UNC	10.0	BAB
3	3	5 3/16	6 1/4	1 3/4	4	1 1/4	9/16	3/8	2 9/16	N/A	3 1/4	4	7/16	6	4	5/8 - 11 UNC	11.5	BAB
4	4	6 3/8	7	2	4	1 1/4	5/8	7/16	3 5/8	N/A	3 1/4	4	7/16	7 1/2	8	5/8 - 11 UNC	18.0	BAC
5	5	7 3/8	7 1/2	2 1/8	4	1 1/4	3/4	1/2	4 3/4	N/A	3 1/4	4	7/16	8 1/2	8	3/4 - 10 UNC	22.5	BAD
6	5 3/4	8 1/2	8	2 1/8	4	1 1/4	3/4	1/2	5 1/2	N/A	3 1/4	4	7/16	9 1/2	8	3/4 - 10 UNC	28.5	BAD
8	7 3/4	10 11/16	9 1/2	2 1/2	6	1 1/4	7/8	5/8	7 1/2	N/A	5	4	9/16	11 3/4	8	3/4 - 10 UNC	49.0	CAE
10	9 3/4	13	10 3/4	2 1/2	6	2	1 1/8	N/A	9 19/32	1/4 x 1/4	5	4	9/16	14 1/4	12	7/8 - 9 UNC	69.0	CAF
12	11 3/4	14 13/16	12 1/4	3	6	2	1 1/8	N/A	11 9/16	1/4 x 1/4	5	4	9/16	17	12	7/8 - 9 UNC	107.0	CAF
14	13 1/4	16 3/4	12	3	6	3	1 3/8	N/A	13 1/8	5/16 x 5/16	5	4	9/16	18 3/4	12	1 - 8 NC	143.0	CAG
16	15 1/4	19	12 61/64	4	6	3	1 5/8	N/A	15	3/8 x 3/8	5	4	9/16	21 1/4	16	1 - 8 NC	238.0	CAH
18	17 1/4	21 3/8	14 1/2	4 1/4	8	4 1/4	1 7/8	N/A	16 7/8	1/2 x 3/8	6 1/2	4	13/16	22 3/4	16	1 1/8 - 7 NC	261.0	DAJ
20	19 1/4	23 1/2	15 7/8	5	8	4 1/4	1 7/8	N/A	18 3/4	1/2 x 3/8	6 1/2	4	13/16	25	20	1 1/8 - 7 NC	366.0	DAJ
24	23 1/4	28 1/4	19 1/2	5 15/16	8	4 1/4	1 7/8	N/A	22 5/8	1/2 x 3/8	6 1/2	4	13/16	29 1/2	20	1 1/4 - 7 NC	576.0	DAJ

Notes:
1. "H" Dimension refers to flat on stem.
2. "Q" dimension is the minimum allowable pipe or flange inside diameter at the centered body face to protect the disc sealing edge against damage when opening the valve.

Copyright © 2010 Tyco Flow Control. All rights reserved.

Valve Sizing

Rate of flow through a valve depends upon the pressure drop. The most common method of presenting this information is by C_V. The C_V is the valve coefficient of flow and represents the flow of water in gallons per minute (GPM) with a 1 psi pressure drop through the valve. The higher the C_V, the greater the flow and the better the control characteristics. Throttling characteristics are shown in the same manner with C_V's at the various disc openings. See Table 1 for tabulated C_V's for the Figure AR1/AR2 Butterfly Valve.

Table 1
C_v Chart (Water @ 70°F, Specific Gravity = 1.00)

Valve Size	Disc position (Degrees Open) 20	30	40	50	60	70	80	90
2"	1.3	5	14	26	40	52	59	60
2.5"	1.4	6	21	44	74	107	138	151
3"	1.5	8	29	67	115	175	234	262
4"	15	48	107	196	318	463	589	647
5"	32	99	206	362	579	832	1045	1141
6"	47	145	295	510	810	1160	1450	1580
8"	84	239	450	751	1190	1754	2385	2892
10"	133	360	652	1064	1683	2524	3596	4593
12"	192	509	899	1449	2288	3470	5085	6682
14"	340	770	1400	2200	3400	5600	7900	10000
16"	440	1000	1800	2800	4500	7400	10800	13000
18"	570	1300	2300	3600	5800	9600	15000	18000
20"	710	1600	2900	4600	7200	12000	18400	22000
24"	1000	2300	4000	6400	10000	16500	25900	30000
30"	1500	3600	6200	9900	16000	26000	42500	47000
36"	2600	5200	9100	15000	23000	38000	65000	70000

Torque Data

Torque is the rotary effort required to operate a valve. This turning force in a butterfly valve is determined by three factors – the friction of the disc and seat due to interference for sealing, bearing friction, and fluid dynamic torque.

Breakaway torque at 70°F

Breakaway torque is the total of the torques resulting from bearing friction and disc/seat interference friction at a given pressure differential. See Table 2 for torques to open and close the valve at pressures shown in wet services with minimum operating frequency of one per week (normal conditions).

Note: These values are valid for water and lubricating fluids only at 70°F. Since torques are greatly increased for dry and nonlubricating fluids and temperature variations, contact your Keystone representative for accurate values in Tathese applications.

Table 2
Seating and Unseating Torques

Valve Size	Category 2 (Normal Conditions) 50	100	150	175
2"	224	229	233	235
2.5"	277	284	291	264
3"	330	340	350	355
4"	500	519	539	549
5"	687	724	761	779
6"	953	1006	1059	1086
8"	1610	1720	1830	1885
10"	2521	2751	2963	3074
12"	3418	3737	4055	4214
14"	5147	5995	6842	–
16"	6808	8116	9424	–
18"	8810	10720	12630	–
20"	11172	13845	16517	–
24"	13372	16994	20616	–
30"	22074	29148	36222	–
36"	33224	45448	57672	–

Tyco Flow Control (TFC) provides the information herein in good faith but makes no representation as to its comprehensiveness or accuracy. This data sheet is intended only as a guide to TFC products and services. Individuals using this data sheet must exercise their independent judgment in evaluating product selection and determining product appropriateness for their particular purpose and system requirements. TFC MAKES NO REPRESENTATIONS OR WARRANTIES, EITHER EXPRESS OR IMPLIED, INCLUDING WITHOUT LIMITATION ANY WARRANTIES OF MERCHANTABILITY OR FITNESS FOR A PARTICULAR PURPOSE WITH RESPECT TO THE INFORMATION SET FORTH HEREIN OR THE PRODUCT(S) TO WHICH THE INFORMATION REFERS. ACCORDINGLY, TFC WILL NOT BE RESPONSIBLE FOR DAMAGES (OF ANY KIND OR NATURE, INCLUDING INCIDENTAL, DIRECT, INDIRECT, OR CONSEQUENTIAL DAMAGES) RESULTING FROM THE USE OF OR RELIANCE UPON THIS INFORMATION. Patents and Patents Pending in the U.S. and foreign countries. Tyco reserves the right to change product designs and specifications without notice. All registered trademarks are the property of their respective owners. Printed in the USA.

Copyright © 2010 Tyco Flow Control. All rights reserved.