110 COMMERCE DRIVE
VALLEY COMMERCIAL CENTER
PELHAM, AL 35124

PHONE (205) 663-0533
FAX (205) 663-0703
www.morinacuator.com

OPERATION
And
MAINTENANCE INSTRUCTIONS
For
Actuator Models B, C, & S

INTRODUCTION

General Application

Morin Actuators are designed for “on-off ” or modulating control of any quarter-turn ball, butterfly, rotary plug or damper style valve application.

Technical Data

Supply pressure:	40-160 psig, See Product Nameplate.
Supply medium:	Any pneumatic fluid compatible with materials of construction.
Temperature rating:	Standard Range: -20°F to 210°F
	Optional Range: -65°F to 300°F
Angular rotation:	90 degrees ± 8 degrees

Note: language translations of the safety related portions of this document are available at www.morinactuator.com

1. Installation

The actuator can be mounted parallel or perpendicular to pipeline. The actuator can be installed in any convenient position including vertical, horizontal or upside down.

A. Bolt mounting bracket to actuator hand tight. DO NOT tighten yet.
B. Install coupling on valve. Be sure rotary stops on valve are removed or adjusted to allow actuator stops to do the stopping.
C. Install actuator and bracket to valve being sure to leave all fastener connections hand tight. If possible, stroke valve and actuator to a half open position 45° and physically shift actuator back and forth until coupling and all fasteners are relaxed then tighten all bolts and nuts. This procedure will accurately align valve stem to actuator output shaft and prolong valve stem seal life.
D. Cycle valve / actuator assembly and observe for smooth operation.
E. Adjust travel stops for perfect alignment in both open and closed positions.
Note: If jackscrew override is installed, please refer to section 2B for stroke adjustment.
F. Tubing Connections – some models utilize two pistons for added power. Spring return (single acting) dual cylinders designs require one "jumper" to make the supply port common on both pistons. Double acting (air to air) dual cylinder designs require two "jumpers." See FIGURE 1 for typical arrangement.

2. Maintenance

Morin actuators are factory lubricated and in general do not require periodic lubrication or maintenance while in service. Actuators should be visually inspected periodically for corrosion damage and promptly repaired. Actuators should be operated at least annually to assure proper operation.

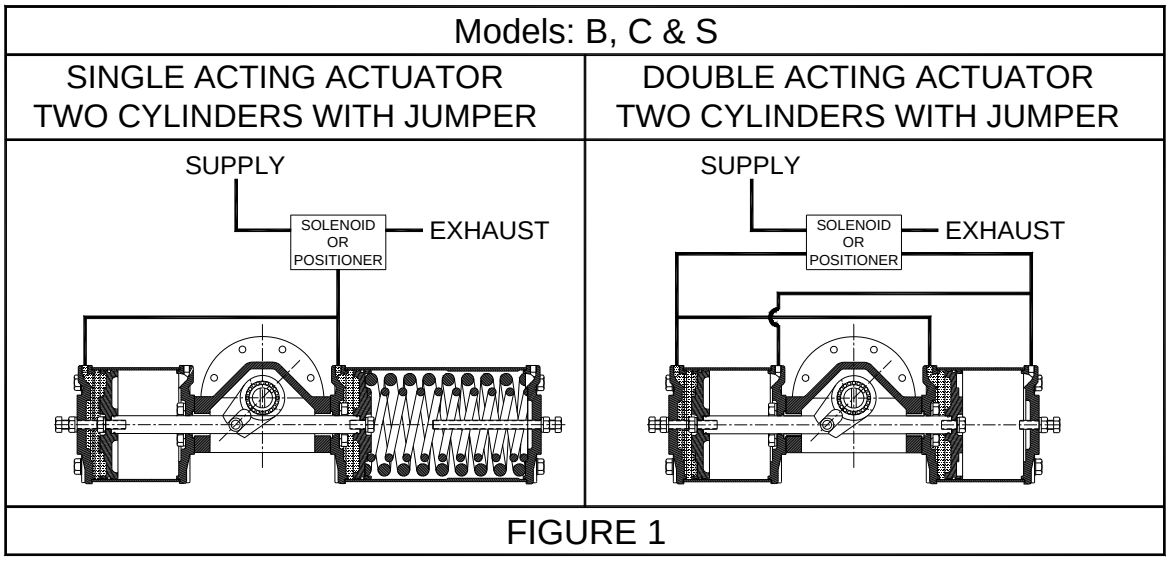

FIGURE 1

3. Jackscrew Override

The jackscrew option is intended for infrequent or emergency on-site operation of the automated valve.

Jackscrew Operating Instructions:

1. Disengage power supply and vent air from actuator.
2. Operate the handwheel to drive the actuator into the desired position. Valve position can be verified by checking the actuator position indicator. For models 006 through 270, the jackscrew must be returned to the fully retracted position before actuator can resume normal operation. Back the jackscrew out until it stops. Air will leak from the jackscrew unless it has been fully retracted against its internal seal.

Actuator Stroke Adjustment: (The jackscrew has a built-in actuator stroke adjustment.)

Models 006 through 270 (See FIGURE 2)

1. Retract the jackscrew override completely by rotating counter clockwise.
2. Loosen the lock nut and turn the brass adjusting screw to the desired position. The handwheel will rotate with the adjusting screw. Never make stroke adjustments by turning the handwheel only.
3. Tighten lock nut.

Models 370, 740 & 575 (See FIGURE 3)

1. Retract the jackscrew override completely by rotating clockwise.
2. Loosen the stroke adjusting screw and lock nut.
3. Using the handwheel, turn the jackscrew to adjust the actuator to the desired position.
4. Screw the adjusting screw until it stops and tighten lock nut.

JACKSCREW OVERRIDE - MODELS 006 through 270

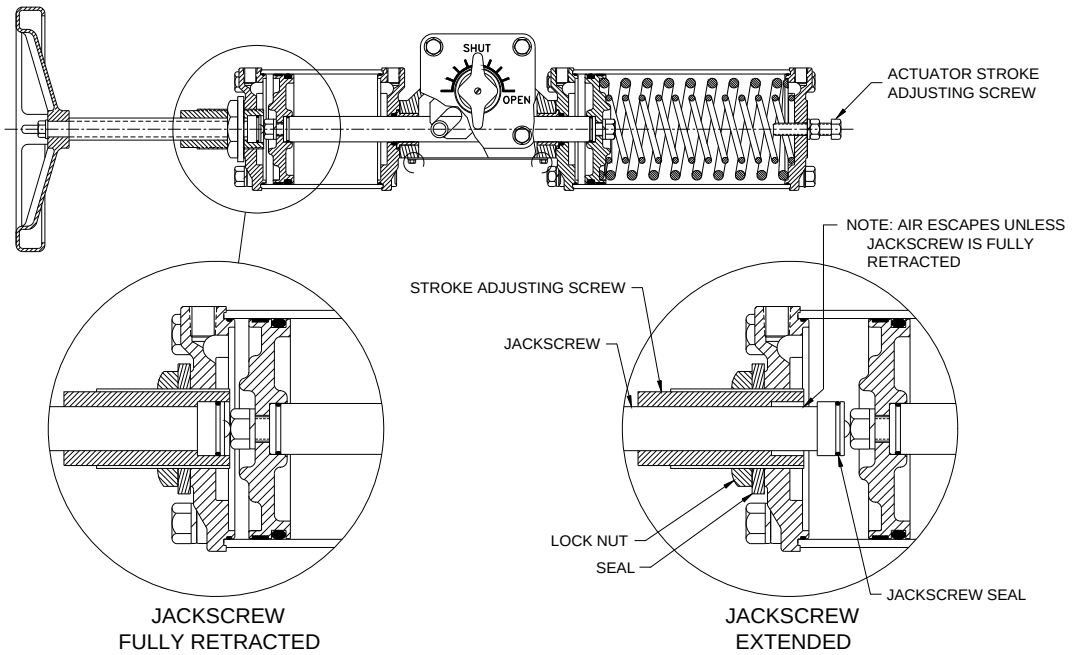

FIGURE 2

JACKSCREW OVERRIDE - MODELS 370, 575 & 740

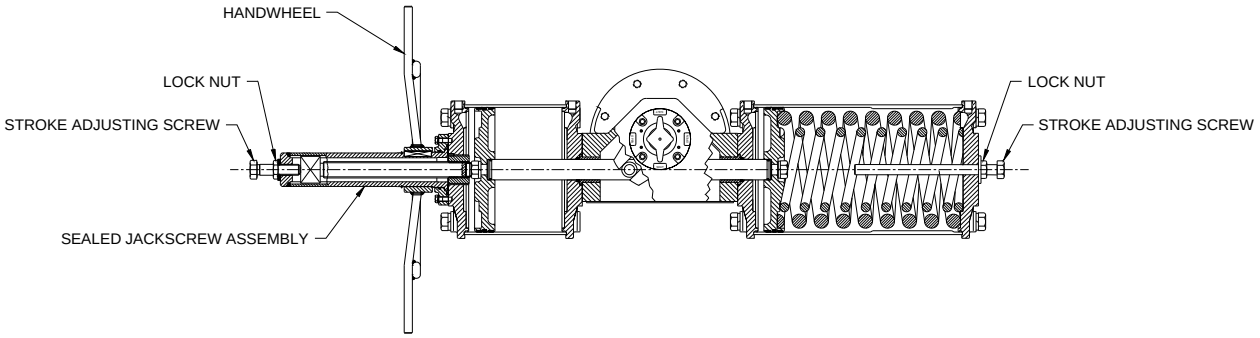

FIGURE 3

HYDRAULIC OVERRIDE

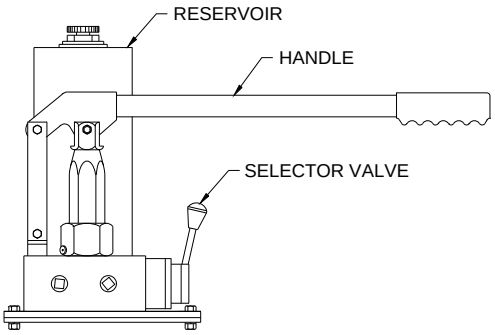

Manual hanpump specifications:

1. Maximum reservoir fill volume = 75 cu. in.
2. Pump relief pressure = 1500 psi
3. Pump volume/stroke = 0.66 cu. in.
4. Handle length = 24 in.

FIGURE 4

SINGLE ACTING
SPRING RETURN
TWO PISTONS
MODELS: 012, 046, 058, 059, 072, 100, 144, 270, 344, 345, 420, 740, 944, 945, 1150,1480, 1929, 1930, 2380

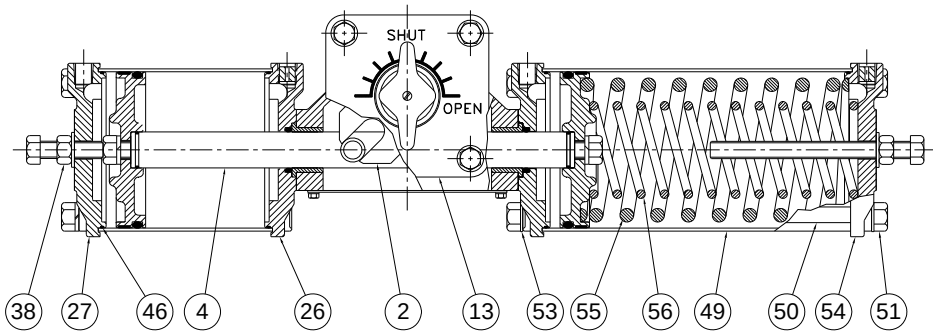

SINGLE ACTING
SPRING RETURN
ONE PISTON
MODELS: 003, 006, 015, 023, 036, 050, 135, 210, 370 & 575

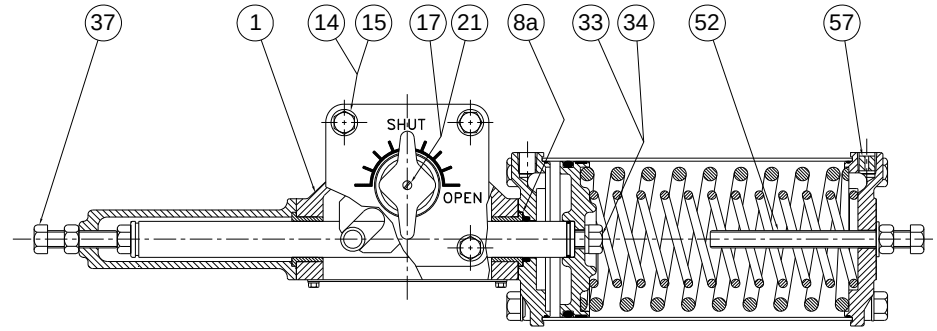

DOUBLE ACTING
AIR TO AIR
TWO PISTONS
MODELS: 012, 059, 072, 100, 144, 270, 345, 420, 740, 945, 1150,1480,1930, 2380

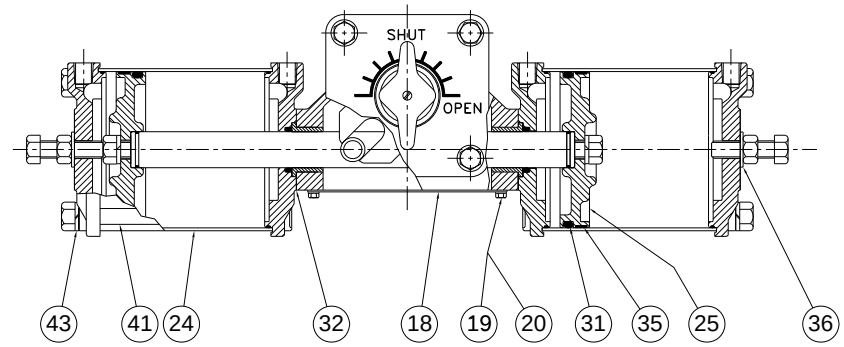

DOUBLE ACTING
AIR TO AIR
ONE PISTON
MODELS: 003, 006, 015,023, 036, 050, 135, 210, 370, 575

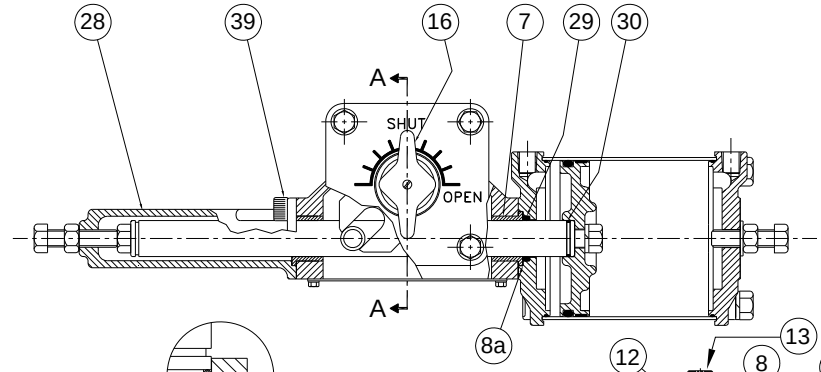

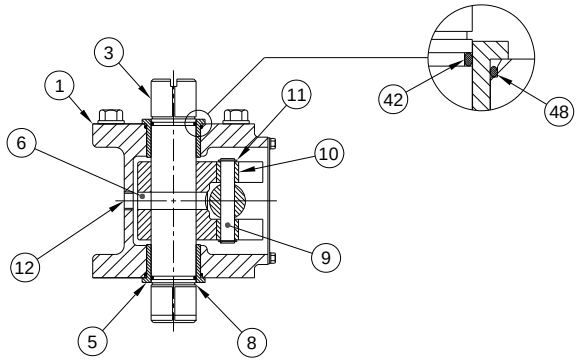

SECTION A–A, MODELS 003–1150.
YOKE SHOWN AT MID-STROKE, POINTER OMITTED FOR CLARITY.

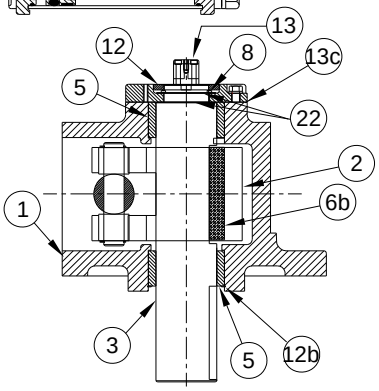

SECTION A–A, MODELS 135 – 1150
YOKE SHOWN AT MID-STROKE, POINTER OMITTED FOR CLARITY.

SINGLE ACTING
SPRING RETURN
TWO PISTONS
MODELS:
1485, 1934,1935,
2385 - 5336

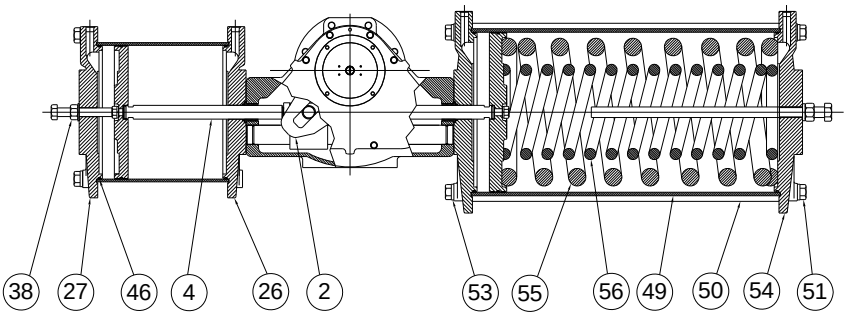

SINGLE ACTING
SPRING RETURN
TWO PISTONS
MODELS:
6044, 7114

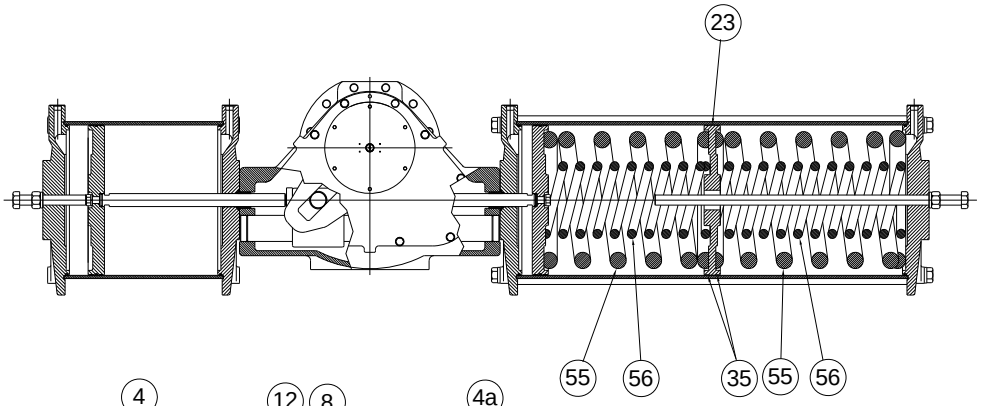

DOUBLE ACTING
AIR TO AIR
TWO PISTONS
MODELS: 1485,
1934, 2385 -7114

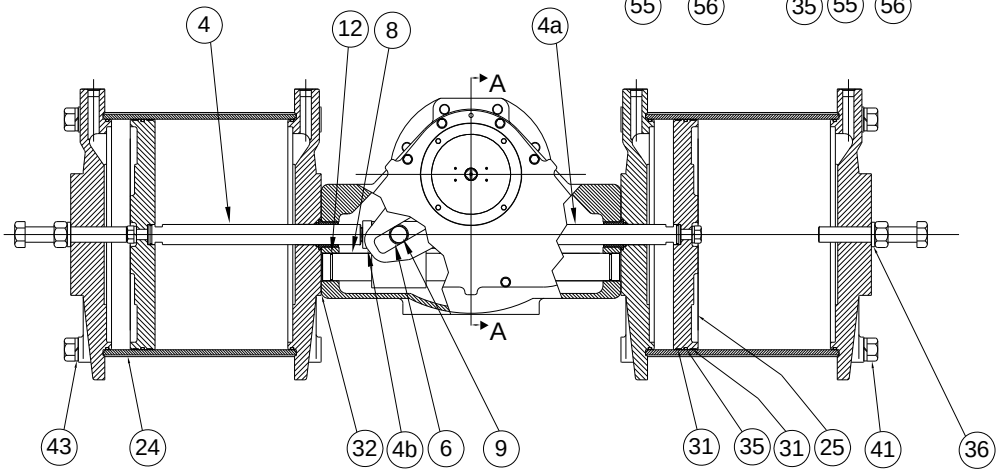

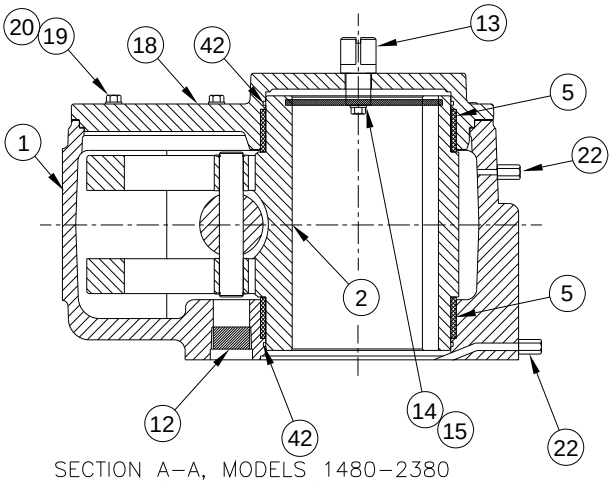

SECTION A–A, MODELS 1480–2380
YOKE SHOWN AT MID-STROKE, POINTER OMITTED FOR CLARITY.

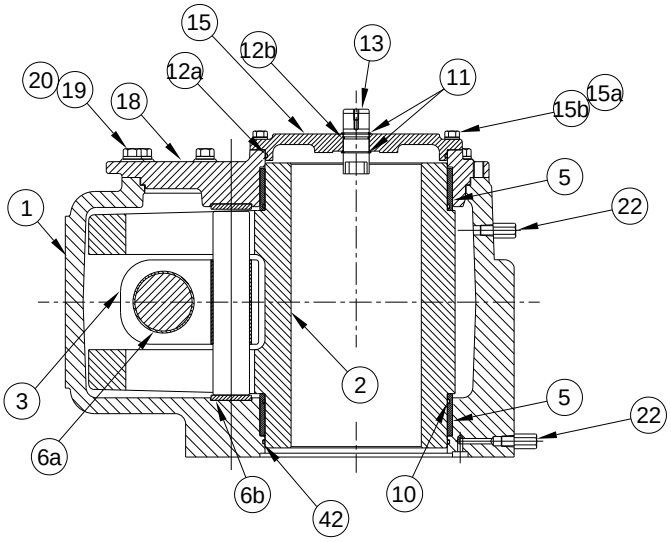

SECTION A–A, MODELS 1485,1934,1935,2385–7114
YOKE SHOWN AT MID-STROKE, POINTER OMITTED FOR CLARITY.

Materials of Construction

		S MATERIAL		B MATERIAL		C MATERIAL
	ITEM	**003-100**	**135 - 1150**	**006-100**	**135 - 1150**	**135 - 1150**
1	Housing	316 SS	316 SS	DUCTILE IRON	DUCTILE IRON	DUCTILE IRON
2	Yoke	17-4 PH	17-4 PH	17-4 PH	17-4 PH	17-4 PH
3	Output shaft	17-4 SS	17-4 SS	4140	4140	4140
4	Piston rod	316 SS	316 SS	CPO	CPO	CPO
5	Bushing - Output Shaft	TEFLON	TEFLON COMPOSITE	BRONZE	TEFLON COMPOSITE	TEFLON COMPOSITE
6a	Yoke Pin	18-8 SS	-	STEEL	-	-
6b	Key - Yoke	-	17-4 PH	-	STEEL	STEEL
7	Bushing - Piston Rod	TEFLON	TEFLON	BRONZE	BRONZE	BRONZE
8	Retaining Ring - Output Shaft	15-7 MO	15-7 MO	STEEL	STEEL	STEEL
9	Thrust Pin	440C SS	440C SS	440C SS	440C SS	440C SS
10	Roller Bearing	440C SS	440C SS	440C SS	440C SS	440C SS
11	Retaining Ring - Pin	15-7 MO	15-7 MO	STEEL	STEEL	STEEL
12	Seal, Thrust Plate	-	BUNA-N	-	BUNA-N	BUNA-N
I2a	Set Screw	18-8 SS	-	18-8 SS		-
12b	Retaining Ring - Lower Bearing	-	18-8 SS	-	STEEL	STEEL
13	Pointer Adaptor	-	NYLON	-	NYLON	NYLON
13a	Position Indicator	304 SS	-	-	-	-
13b	Thrust Plate	-	316 SS	-	DUCTILE IRON	DUCTILE IRON
13c	Gasket, Thrust Plate	-	FIBER	-	FIBER	FIBER
14	Hex Head Bolt	18-8 SS	18-8 SS	18-8 SS	STEEL	STEEL
15	Lock Washer	18-8 SS	18-8 SS	18-8 SS	STEEL	STEEL
16	Pointer	SOFT PVC	SOFT PVC	SOFT PVC	SOFT PVC	SOFT PVC
T7	Round Head Screw	18-8 SS	18-8 SS	18-8 SS	STEEL	STEEL
18	Cover- Housing	316 SS	316 SS	STEEL	STEEL	STEEL
19	Hex Head Bolt	18-8 SS	18-8 SS	18-8 SS	STEEL	STEEL
20	Lock Washer	18-8 SS	18-8 SS	18-8 SS	STEEL	STEEL
21	Pointer washer	18-8 SS	18-8 SS	18-8 SS	STEEL	STEEL
22	Thrust Washer	-	18-8 SS	-	STEEL	STEEL
23	Gasket - Cover	FIBER	FIBER	FIBER	FIBER	FIBER
24	Cylinder	316 SS	316 SS	316 SS	316 SS	STEEL /XYLAN
25	Piston	316 SS	316 SS	DUCTILE IRON	DUCTILE IRON	DUCTILE IRON
26	Adaptor	316 SS	316 SS	DUCTILE IRON	DUCTILE IRON	DUCTILE IRON
27	End cap	316 SS	316 SS	DUCTILE IRON	DUCTILE IRON	DUCTILE IRON
28	Rod Cover	316 SS	316 SS	DUCTILE IRON	DUCTILE IRON	DUCTILE IRON
29	Seal - Piston Rod	BUNA-N	BUNA-N	BUNA-N	BUNA-N	BUNA-N
30	Seal -Piston Bolt	BUNA-N	BUNA-N	BUNA-N	BUNA-N	BUNA-N
31	Seal- Piston	BUNA-N	BUNA-N	BUNA-N	BUNA-N	BUNA-N
32	Gasket - Housing	FIBER	FIBER	FIBER	FIBER	FIBER
33	Piston Bolt	18-8 SS	18-8 SS	18-8 SS	STEEL	STEEL
34	Lock Washer	18-8 SS	18-8 SS	18-8 SS	STEEL	STEEL
35	Bearing - Piston	TEFLON	TEFLON	TEFLON	TEFLON	TEFLON
36	Thread Seal	SS/EPDM	SS/EPDM	STEEL/EPDM	STEEL/EPDM	STEEL/EPDM
37	Travel Stop Bolt	18-8 SS	18-8 SS	18-8 SS	STEEL	STEEL
38	Jam Nut	18-8 SS	18-8 SS	18-8 SS	STEEL	STEEL
39	Socket Head Cap Screw	18-8 SS	18-8 SS	18-8 SS	STEEL	STEEL
41	Tie Rod	18-8 SS	18-8 SS	18-8 SS	STEEL	STEEL
42	Seal - Output Shaft	-	-	BUNA-N	-	-
43	Lock Washer	18-8 SS	18-8 SS	18-8 SS	STEEL	STEEL
45	Stato-seal	BUNA-N	BUNA-N	BUNA-N	BUNA-N	BUNA-N
46	Cylinder Gasket or O-ring	TFE OR BUNA-N	BUNA-N	BUNA-N	BUNA-N	BUNA-N
47	Label - Nameplate	MYLAR	MYLAR	MYLAR	MYLAR	MYLAR
48	Seal - Output Shaft Bushing	-	-	BUNA-N	-	-
49	Cylinder - Spring Side	316 SS	316 SS	316SS	316 SS	STEEL /XYLAN
50	Tie Rod - Spring Side	316 SS	316 SS	316 SS	STEEL	STEEL
51	Hex Head Bolt	18-8 SS	18-8 SS	18-8 SS	STEEL	STEEL
52	Travel Stop Bolt	18-8 SS	18-8 SS	18-8 SS	STEEL	STEEL
53	Flat Washer	18-8 SS	18-8 SS	18-8 SS	STEEL	STEEL
54	End cap - Spring Side	316 SS	316 SS	DUCTILE IRON	DUCTILE IRON	DUCTILE IRON
55	Spring - Outer	STEEL	STEEL	STEEL	STEEL	STEEL
56	Spring - Inner	STEEL	STEEL	STEEL	STEEL	STEEL
57	Breather	18-8 SS	18-8 SS	STEEL	STEEL	STEEL
58	Label - Spring	LEXAN	LEXAN	LEXAN	LEXAN	LEXAN

Materials of Construction

	ITEM	S MATERIAL 1480-2380
1	Housing	316 SS
2	Yoke	17-4 PH
4	Piston rod	316 SS
5	Bearing - Yoke	TEFLON COMPOSITE
7	Bushing - Piston Rod	BRONZE
9	Thrust Pin	440C SS
10	Slide Block	BRONZE
11	Retaining Ring - Pin	15-7 MO
12	Plug - Thrust Pin Access	18-8 SS
13	Pointer Adaptor	NYLON
14	Drive Bar	STEEL
15	Screw - Accessory Deive	STEEL
16	Pointer	SOFT PVC
17	Round Head Screw	18-8 SS
18	Cover - Housing	316 SS
19	Hex Head Bolt- Cover	18-8 SS
20	Lock Washer - Cover	18-8 SS
21	Pointer Washer	18-8 SS
22	Vent Valve	Brass
24	Cylinder	316 SS
25	Piston	316 SS
26	Adaptor	316 SS
27	Endcap	316 SS
28	Rod Cover	316 SS
29	Seal - Piston Rod	BUNA-N
30	Seal - Piston Bolt	BUNA-N
31	Seal - Piston	BUNA-N
32	Gasket - Housing	FIBER
33	Hex Head Bolt - Piston	18-8 SS
34	Lock Washer - Piston	18-8 SS
35	Bearing - Piston	TEFLON
36	Thread Seal	SS/EPDM
37	Travel Stop Bolt	18-8 SS
38	Jam Nut	18-8 SS
39	Socket Head Cap Screw	18-8 SS
41	Tie Rod	18-8 SS
42	Seal - Yoke	BUNA-N
43	Lock Washer	18-8 SS
44	Hex Head Bolt	18-8 SS
45	Stato-seal	BUNA-N
46	Cylinder O-ring	BUNA-N
47	Label - Nameplate	MYLAR
48	Seal - Output Shaft Bushing	BUNA-N
49	Cylinder - Spring Side	316 SS
50	Tie Rod - Spring Side	316 SS
51	Hex Head Bolt	18-8 SS
52	Travel Stop Bolt	18-8 SS
53	Flat Washer	18-8 SS
54	Endcap - Spring Side	316 SS
55	Spring - Outer	STEEL
56	Spring - Inner	STEEL
57	Breather	18-8 SS
58	Label - Spring	LEXAN

	ITEM	B MATERIAL 1485 - 7114	C MATERIAL 1485 - 7114
1	Housing	DUCTILE IRON	DUCTILE IRON
2	Yoke	DUCTILE IRON	DUCTILE IRON
3	Guide Block	DUCTILE IRON	DUCTILE IRON
4	Piston Rod - Left	CPO	CPO
4a	Piston Rod - Right		
4b	Jam Nut - Piston rod	STEEL	STEEL
5	Bearing - Yoke	TEFLON COMPOSITE	TEFLON COMPOSITE
6	Bearing - Thrust Pin	TEFLON COMPOSITE	TEFLON COMPOSITE
6a	Bearing - Guide Bar	TEFLON COMPOSITE	TEFLON COMPOSITE
6b	Thrust Bearing - Thrust Pin	NYLON	NYLON
7	Bushing - Piston Rod	BRONZE	BRONZE
8	Guide Bar	CPO	CPO
9	Thrust Pin	440C SS	440C SS
10	Seal, Bearing	BUNA-N	BUNA-N
11	Retaining Ring - Accessory Drive	STEEL	STEEL
12	Seal - Guide Bar	BUNA-N	BUNA-N
12a	Seal, Cap	BUNA-N	BUNA-N
12b	Seal, Accessory Drive	BUNA-N	BUNA-N
13	Accessory Drive	STEEL	STEEL
14	Drive Bar	STEEL	STEEL
15	Cap	DUCTILE IRON	DUCTILE IRON
15a	Washer, Cap	STEEL	STEEL
15b	Screw, Cap	STEEL	STEEL
16	Pointer	SOFT PVC	SOFT PVC
17	Round Head Screw	18-8 SS	STEEL
18	Cover - Housing	DUCTILE IRON	DUCTILE IRON
19	Hex Head Bolt- Cover	STEEL	STEEL
20	Lock Washer - Cover	STEEL	STEEL
21	Pointer Washer	STEEL	STEEL
22	Vent Valve	Brass	Brass
23	Cup, Spring	DUCTILE IRON	DUCTILE IRON
24	Cylinder	316 SS	STEEL / XYLAN
25	Piston	DUCTILE IRON	DUCTILE IRON
26	Adaptor	DUCTILE IRON	DUCTILE IRON
26a	Spacer Plate (1485 - 2385 Only)	DUCTILE IRON	DUCTILE IRON
27	Endcap	DUCTILE IRON	DUCTILE IRON
28	Rod Cover	DUCTILE IRON	DUCTILE IRON
29	Seal - Piston Rod	BUNA-N	BUNA-N
30	Seal - Piston Bolt	BUNA-N	BUNA-N
31	Seal - Piston	BUNA-N	BUNA-N
32	Gasket - Housing	FIBER	FIBER
33	Hex Head Bolt - Piston	STEEL	STEEL
34	Lock Washer - Piston	STEEL	STEEL
35	Bearing - Piston	TEFLON	TEFLON
36	Thread Seal	STEEL/EPDM	STEEL/EPDM
37	Travel Stop Bolt	STEEL	STEEL
38	Jam Nut	STEEL	STEEL
39	Socket Head Cap Screw	STEEL	STEEL
41	Tie Rod	STEEL	STEEL
42	Seal - Yoke	BUNA-N	BUNA-N
43	Lock Washer	STEEL	STEEL
44	Hex Head Bolt	STEEL	STEEL
45	Stato-seal	BUNA-N	BUNA-N
46	Cylinder O-ring	BUNA-N	BUNA-N
47	Label - Nameplate	MYLAR	MYLAR
49	Cylinder - Spring Side	316 SS	STEEL / XYLAN
50	Tie Rod - Spring Side	STEEL	STEEL
51	Hex Head Bolt	STEEL	STEEL
52	Travel Stop Bolt	STEEL	STEEL
53	Flat Washer	STEEL	STEEL
54	Endcap - Spring Side	DUCTILE IRON	DUCTILE IRON
55	Spring - Outer	STEEL	STEEL
56	Spring - Inner	STEEL	STEEL
57	Breather	STEEL	STEEL
58	Label - Spring	LEXAN	LEXAN

4. Manual Handpump Hydraulic Override (See Figure 4)

A. Always vent the air supply to the cylinders before using the hydraulic override.
B. Maintain fluid level to fill line using ISO-22 hydraulic fluid. Use Chevron "Hydraulic Oil AW" or equal.
C. Open reservoir air vent when operating pump.
D. The selector control valve is set in center position for remote operation. Select left or right positions for manual open or manual close as shown on pump label.
E. Store and lock handle to keep pump plunger closed. Do not remotely operate actuator with handle on plunger.

5. Integral Proximity Switch Mounting (Factory ordered option)

A. Remove plastic plugs from proximity ports located on the back of the actuator housing.
B. Insert switch and turn clockwise until switch touches ferrous activator on yoke, then back off approximately 1/16".
C. Test switch by stroking actuator and verifying make and break of switch.
D. Repeat procedure for second switch if required.

6. Spring Conversion

All spring packs except the 40 psi consist of an inner and outer spring. The 40 psi spring pack uses an outer spring only. Various spring packages are available as shown in the Morin catalog.

CAUTION: Before attempting spring conversions always be sure that spring is in the "failed" or extended position. Remove any accessory equipment that may cause the spring to be cocked (e.g.: declutchable override, jackscrew override, etc.).

A. Back off adjustable travel stop on end of actuator opposite spring end. This will allow maximum spring extension inside the actuator.

(Models S-003 & B-006 only)

B. Remove tie rod bolts (41). Back off piston bolt (33) until spring is fully relaxed and piston (25) is free.
C. Remove 80 PSI spring package and replace with desired spring package.
D. Re-assemble piston, cylinder, endcap and tie rods, being sure to follow the tie rod tightening sequence (FIGURE 8). Do not over tighten bolts. Refer to Assembly Torque Requirements Chart (FIGURE 9).

(All models except S-003 & B-006)

B. Alternately and uniformly remove bolts (51) from hollow tie rods. Back off each bolt approximately ¼", following the tie rod sequence (FIGURE 8). Repeat the sequence until spring(s) is/are totally relaxed and endcap is free.
C. Remove 80 PSI spring package and replace with desired spring package.
D. Re-assembly endcap with bolts (51). Use reverse procedure as shown in Step B, being sure to follow the tie rod tightening sequence (FIGURE 8). Be sure each hollow tie rod slides into the counterbore in endcap. Do not over tighten bolts. Refer to Assembly Torque Requirement Chart (FIGURE 9).
E. Remove nameplate from actuator and stamp or etch correct spring pressure rating accordingly.

7. Failure Mode Change

(Models 003-100 & 144) Canted and Symmetric Yoke Actuators

Conversion from "fail close" to "fail open" is accomplished by flipping the actuator over. The top and bottom of the center housing have identical mounting flanges and output shaft dimensions Remove the vinyl pointer and indicator plate and mount them on opposite side of actuator.

(Models 135, 270-7114) Canted and Symmetric Yoke Actuators

Conversion requires removal of the spring cylinder assembly and reinstallation on the other side of the housing. It is recommended that fail open and fail closed be ordered from the factory.

8. Removal of Actuator from Valve

CAUTION: Do not attempt to remove mounting bolts between actuator and valve until supply pressure has been disconnected and vented. If spring return, be sure that valve is completely in failed position. If valve is frozen in a position causing the spring to be cocked, removal of bracket bolts would allow spring to stroke, resulting in the actuator rotating over bracket causing possible injury or damage.

A. Loosen bracket to actuator bolts to hand tight position.
B. Physically shift actuator back and forth to be sure there is no strain (or shear stress) on the bracket bolts. Once it has been determined that there is no pressure or spring coil remaining in the actuator, remove bolts and remove actuator and coupling from valve.
C. In the event the valve is frozen or locked in place, resulting in spring energy remaining in the actuator, replace adjusting screw (37) on end of actuator opposite spring end with length of "all thread" rod of sufficient length and turn clockwise until it contacts the piston. This procedure will safely secure the piston and spring assembly and allow actuator removal. Be sure to remove "all thread" rod prior to actuator disassembly.

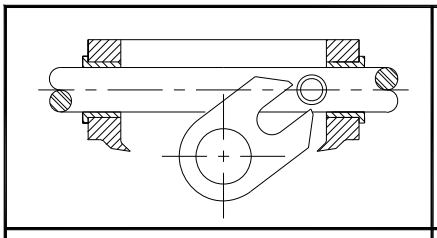

FIGURE 5

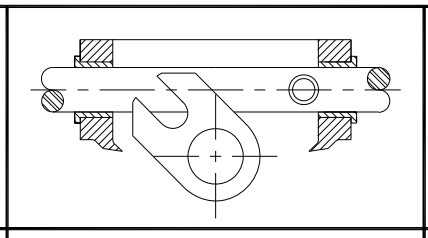

FIGURE 6

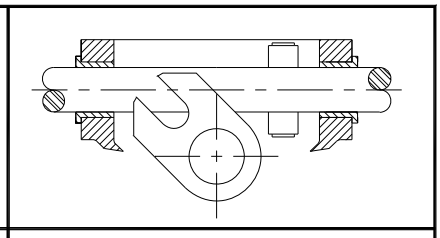

FIGURE 7

9. Disassembly

Disassembly of Symmetric Yoke Actuators

A. Remove endcap(s) (27); tie rods (41) and cylinder (24). Remove rod cover (28) if applicable.
B. Remove piston bolts (33) and pistons (25) and springs if applicable (55 and 56).
C. Remove adaptor (26) and piston rod seals (29).
Note: S-003, B-006 & B-015 have one piece cast housing / adaptor.
D. Remove housing cover (18), pointer (16) and position indicator (where applicable)(13).

(Models 003-100 & 144)

E. Disengage yoke (2) from roller bearing assembly by pulling piston rod to extreme right, as in FIGURE 5, and swing yoke mechanism clear of roller bearing as in FIGURE 6.
F. Rotate piston rod 90° to allow access to retaining ring (11) as shown in FIGURE 7.
G. Remove retaining ring and bearing (10). Then rotate piston rod (4) 180° and remove the bearing and thrust pin assembly.
H. Remove piston rod (4) and piston rod bushings (7).

I. Remove plug (12) from back of housing.
J. Using a punch or suitable dowel pin, insert through clearance hole and press yoke pin (6) out.
K. Remove retaining ring (8) from output shaft. Remove output shaft and yoke.
L. Remove bushings (5) from housing.

(Models 135, 270-1150)

E. Disengage yoke (2) from roller bearing assembly by pulling piston rod (4) to extreme right, as in FIGURE 5, and swing yoke (2) clear of roller bearing (10) assembly. See FIGURE 6.
F. Rotate piston rod (4)90° to allow access to retaining ring (11) as shown in FIGURE 7.
G. Remove the thrust pin retaining rings (11) and withdraw the roller bearings (10), and thrust pin (9).
H. Remove piston rod (4) and piston rod bushings (7).
I. Remove retaining rings (8) and (12b) on both ends of output shaft.
J. Remove thrust plate (13b) and thrust washers (22) from the output shaft (3).
K. Position the yoke (2) in the fully clockwise position (viewed from the thrust plate (13b) side).
L. Using a soft hammer, drive output shaft (3) out through top of housing (1).
M. Withdraw yoke (2) from housing (1).
N. Remove the output shaft bushings (5) from the housing (1).

(Models 1480, 1929, 1930, 2380)

E Remove the pointer (16) and accessory drive (13) from the actuator by removing the screw (14) from inside the yoke (2) bore.
F. Remove all cover bolts (19). Three of these bolts occupy “jack bolt” holes and are threaded into the cover (18). Screw three long cover bolts into these “jack bolt” holes and turn them sequentially ½ turn at a time to pry the cover off. See Figure 6A.
G. Remove the thrust pin access plug (12). (Figure 5A)
H. Push the yoke (2) using the piston rod (4) until the thrust pin(9) is centered over the thrust pin access hole (See Figure 5A). Remove the upper thrust pin retaining ring (11) from the thrust pin (9) (Figure 7A).
I. Push the thrust pin (9) and lower retaining ring (11) out through the thrust pin access hole allowing the slide blocks (10) to fall free. Remove the slide blocks (10).
J. Remove the piston rod (4), piston rod bushings (7), yoke (2). Remove yoke bearings (5), and yoke seals (42) from the housing (1) and cover (18). Remove the upper and lower vent valves (22) from the back of the housing.

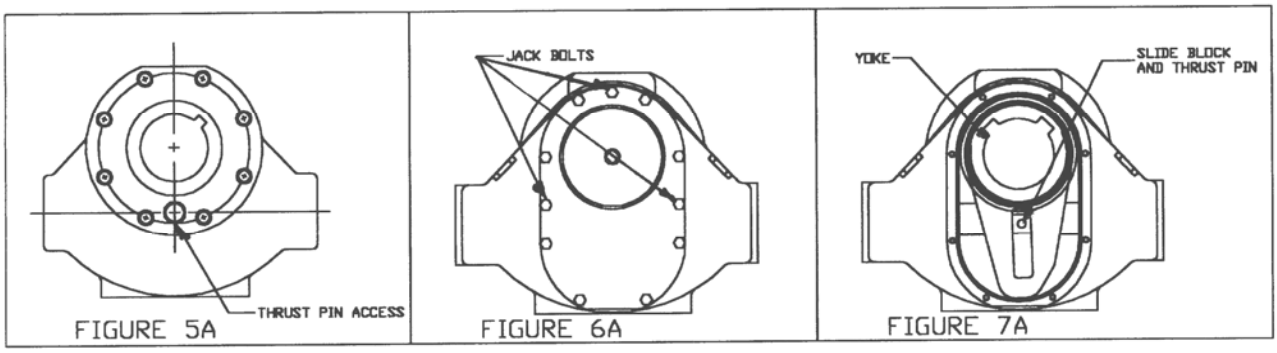

(Models 1485, 1934, 1935, 2385 – 7114)

D. Remove adaptor spacer (26a) (installed on models 1485 – 2385 only, see Figure 7B.)
E. Remove cap (15) by removing the cap bolts (15a)
F. Remove all cover bolts (19) and cover (18). Three of these bolts occupy "jack bolt" holes and are threaded into the cover (18). Screw three long cover bolts into these "jack bolt" holes and turn them sequentially ½ turn at a time to pry the cover off. See figure 6B.
K. Swing the yoke (2) to one side to expose the guide block (3).
L. Unscrew the piston rod jam nuts (4b) and remove the piston rods (4 and 4a)
M. Remove the guide bar (8), guide block(3) and yoke (2).
N. Remove the yoke bearings (5).

Disassembly of Canted Yoke Actuators

Canted yoke actuators are disassembled the same way as the symmetric yoke actuators except for the following additional instructions for specific models:

(Models 023-100)

These actuators are disassembled using the same procedure as the symmetric actuators. However, the thrust pin (9) is removed from the housing (1) via access plugs on the upper and lower housing mounting flanges.

(Models 135-1150)

F. Remove the pointer (16), pointer adaptor (13) and pry out the thrust plate seal (12) (if fitted).
G. Remove the thrust plate (13b) and thrust washers (22) from the output shaft (3).
H. Position the yoke (2) in the fully clockwise position (viewed from the thrust plate (13b) side).
I. Using a soft hammer, drive output shaft (3) out through the thrust plate side of the housing (1). This will drive out the upper output shaft bushing (5) and yoke key (6b).
J. Remove the piston rod bushings (7) from the housing (1).
K. Shift the yoke (2) around in the housing (1) so that the thrust pin (9) and roller bearing (10) assembly can be moved out of the yoke slot. Remove the thrust pin retaining rings (11) and withdraw the roller bearings (10), thrust pin (9), piston rod (4) and yoke (2).
L. Remove the lower output shaft bushing retaining ring (12b) and lower output shaft bushing (5).

10. <u>Assembly</u>

Assembly of Symmetric Yoke Actuators

(Models 003-100 & 144)

A. Insert piston rod bushings (7) and output shaft bushings (5) in housing. (On models B-006 through 100 lube output shaft bushings o-rings (48) with "Dow Corning #55" lubricant. Push one o-ring halfway on each bushing and install bushings in housing.)
B. Place yoke (2) in position in housing. Lubricate with "WD40" or similar lubricant and install output shaft (3). (On models B-006 through 100, lube output shaft o-rings (42) with "Dow Corning #55" lubricant. Install one o-ring on one end of output shaft and insert through housing and yoke. Install second o-ring on opposite end of output shaft and push output shaft back into housing.) Secure output shaft with retaining rings (8).
C. Lubricate and press yoke pin (6) into yoke and output shaft assembly from open side of housing. Be sure pin is pressed flush in yoke to prevent interference with piston rod (4).

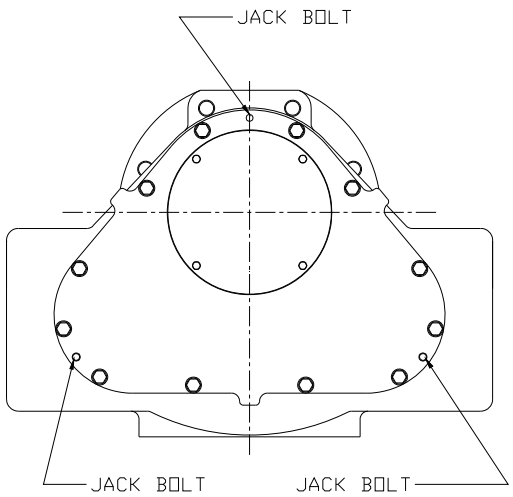

FIGURE 6B

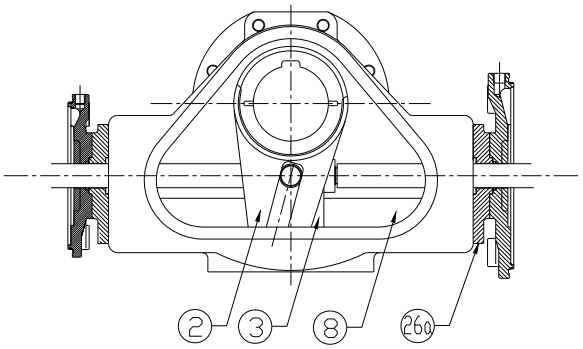

CANTED YOKE ACTUATOR

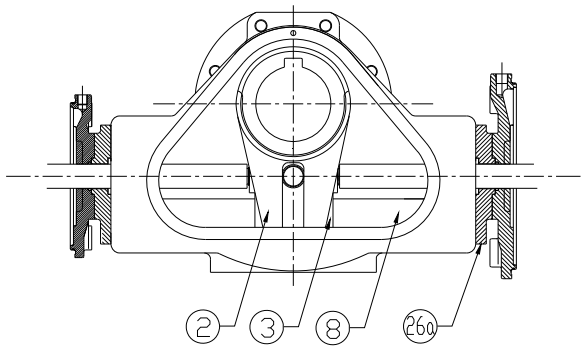

SYMMETRIC YOKE ACTUATOR

FIGURE 7B

THE CANTED YOKE PISTON ROD IS NOT SYMMETRICAL. IT MUST BE POSITIONED AS SHOWN. THE SYMMETRICAL YOKE PISTON ROD CAN BE INSTALLED EITHER WAY.

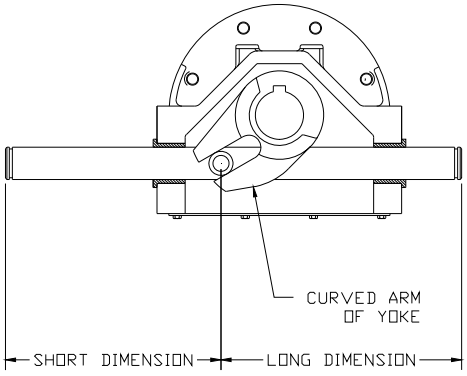

CANTED YOKE ACTUATOR
CLOSED POSITION - TOP VIEW

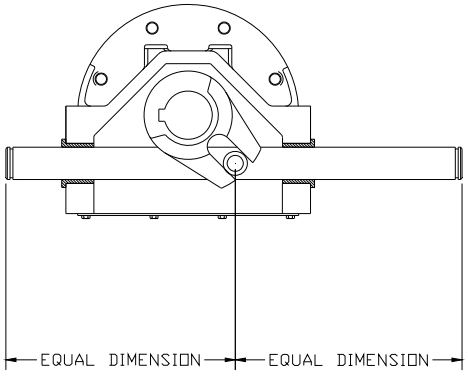

SYMMETRIC YOKE ACTUATOR
OPEN POSITION - TOP VIEW

FIGURE 7C

(Models 135, 270-1150)

A. Insert yoke key (6b) into output shaft (3).
B. Install yoke (2) in housing (1). Slide output shaft (3) through top of housing (1) into the yoke (2). Install lubricated upper and lower bearings (5a).
C. Install lower thrust washer (22), thrust plate (13), upper thrust washer (22) retaining ring (8) and thrust plate seal (12) (if fitted). Install lower bearing retaining ring (12b).

(Models 003-1150)

D. Lubricate with "WD40" and install piston rod (4) being careful not to scratch sealing surfaces when sliding through yoke assembly.
E. Swing yoke clear toward left side of housing as shown in FIGURE 7.
F. Sub-assemble thrust pin (9) with one roller bearing (10) and one retaining ring (11). Pre-lubricate sub-assembly with high temperature grease such as "Whitmore's Omnitemp II".
G. Install roller bearing sub-assembly per FIGURE 7. Rotate piston rod 180° and assemble second roller bearing and retaining ring. Place ample amount of high temperature grease on roller bearing and inside wear area of yoke.
H. Engage roller bearing in yoke assembly as shown in FIGURE 7, 6, & 5.
I. Install plug (12) in back of housing if applicable. Use "Loctite 222 Thread Locker".

(Models 1480-2380)

A. Install yoke seals (42) using o-ring lube and yoke bearings (5) using WD-40 into the cover (18) and housing (1).
B. Inspect the housing upper and lower vent passages and clear any blockage. Install new vent valves (22).
C. Lubricate the bearing surfaces of the yoke (2) with WD-40 and install the yoke (2) in the housing (1). Install the yoke with the marking and the pointer drive bar visible through the cover hole.
D. Install the piston rod bushings (7) and the piston rod (4).
E. Install the lower retaining ring (11) on the thrust pin (9) and lubricate the pin with Whitmore grease. Lubricate the slide blocks (10) with Whitmore grease inside and out and position them in the yoke (2) slots. Insert the thrust pin (9) through the thrust pin access hole (Figure 6A) and slide it through the lower slide block (10), piston rod (4), and upper slide block (10). Install the upper retaining ring (11) on the thrust pin (9).
F. Place joint compound on the sealing surface of the cover (18), install the cover on the housing (1), and torque the cover bolts (19) to 30 ft-lb. Install the short cover bolts (19) into the jack bolt holes of the cover (18).

(Models 1485-7114)

A. Install new guide bar bearing (6a) and thrust pin bearings (6b) in the guide block (3).
B. Install new yoke bearings (5) and thrust bearings (6) in housing (1) and cover (18). Position the bearing seal (10) in the yoke bearings (5) toward the inside of the housing (1).
C. Use Valvoline multi-purpose grease /GM (or equal)to lubricate all bearings including a generous amount on the thrust bearings (6).
D. Insert the yoke (2) into the housing (1).
E. Insert the guide block (3) into the housing (1) and slide the guide bar (8) through the housing (1) and through the guide block. Install the guide bar seals (12), lubricate the seals with grease, and then finish sliding the guide bar into the housing.
F. Install the piston rod bearings (7) in the housing (1).
G. Install the jam nuts (4b) on the piston rods (4) and (4a) and install the piston rods. Symmetric yoke piston rods are equal length and can be installed on either side. See Figure 7c.
H. Swing the yoke (2) over the guide block (3)and install the thrust pin (9).
I. Insert a bead of Dow Corning 732 silicone sealant on the cover (18) sealing surface and install the cover (18) on the housing (1) torquing the bolts to 15 in-lb.
J. Install the cap seal (12a) and cap(15).

(Cylinder and Rod Cover Assembly-All Models)

J. Assemble bolt (33) on end of piston rod before installing rod cover when rod cover is required.
K. Install rod cover (28) if applicable. Actuators utilizing one piston only require a rod cover. Bolt rod cover and gasket in place with socket head screws (39). Use "Locktite 222 Thread Locker."
L. For models 1485 – 3072 install the piston rod spacer plate.
M. Assemble piston rod o-ring (29) on piston rod. Lubricate o-ring with "Dow Corning #55" lubricant.

TIE ROD TIGHTENING SEQUENCE

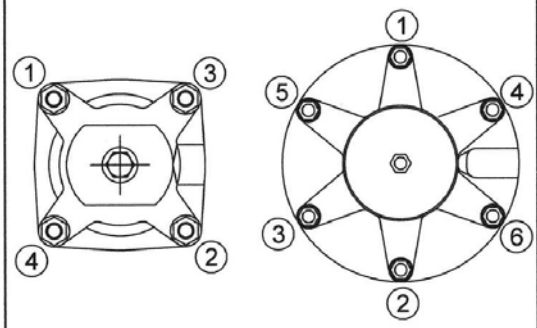

FIGURE 8

ASSEMBLY TORQUE REQUIREMENTS (FT./LBS.)

Model No.	Adaptor Bolt (44)	Piston Bolt (33)	Tie Rod (33)	Tie Rod Bolt Spring side (51)
003	N/A	15	10	N/A
B-006	N/A	15	15	N/A
015	N/A	15	30	25
S-006, 012	15	15	15	10
023 thru 100	30	40	30	25
135, 270	150	150	150	100
344	150	150	250	100
345	150	150	150	250
210,420	150	150	250	250
370, 575 thru 7114	250	250	250	250

FIGURE 9

N. Assemble adaptor (26) to housing using gasket (32) between adaptor and housing. If actuator is spring return model be sure to insert long tie rod bolts (51) with washer into adaptor prior to bolting adaptor to housing. Secure the adaptor (26) using hex head bolts (44) with stato-seals (45). Use “Locktite 262 Permanent Thread Locker” on the bolts. Uniformly tighten referring to Assembly Torque Requirement (FIGURE 9) for proper bolt torque.
O. Lubricate piston bolt o-ring (30) with "Dow Corning #55" lubricant and put on piston rod. Assemble piston (25) to piston rod with bolt (33) and lock washer (34). Use "Locktite 262 Permanent Thread Locker"on bolt threads. Rotate piston before tightening piston bolt to ensure proper seating of o-ring.
P. Install cylinder gasket or lubricated o-ring (46) in adaptor groove.
Q. Lubricate piston seal (31) with "Dow Corning #55" lubricant and install on piston.
R. Lubricate piston bearing (35) and cylinder (24) with "Dow Corning #55" lubricant. Hold piston bearing (35) in place on piston (25) and slide cylinder (24) over piston and bearing until cylinder is in contact with gasket / o-ring (46) in adaptor groove. On spring return models substitute one cylinder (24) with cylinder (49) on spring side.
S. Assemble tie rods (41) on adaptor.
T. Insert cylinder gasket / o-ring (46) in endcap (27) groove and place endcap over tie rods (41) and on cylinder (24).
U. Assemble lock washers (43) and hex nuts (HP Models) on tie rods and uniformly tighten. Do not exceed torque values shown in Assembly Torque Requirement Table (FIGURE 9).

SPRING RETURN ONLY
(Models S-003 & B-006 only)

V. Place cylinder gasket / o-ring (46) in endcap (54).
W. Place springs in adaptor, being sure to nest in contours. Mount piston (25) over springs and fasten with piston bolt (33) and lock washer (34). Do not over tighten bolts. Refer to Assembly Torque Requirement (FIGURE 9).

All Models (except S-003 & B-006)

V. On spring return models; hollow tie rods (50) must be screwed onto long bolts (51) protruding from adaptor (26).
W. Place cylinder gasket / o-ring (46) in endcap (54). Insert long bolts (51) with flat washer (53) in endcap.
X. Place spring(s) in cylinder, being sure to nest in piston contours. Mount endcap over extended spring(s) and fasten to hollow tie rods (50) with bolts (51). To prevent galling, lubricate bolts (51) with "Whitmore’s Omnitemp II" grease or equal. Alternately and uniformly tighten bolts (51) in hollow tie rods. Tighten each bolt approximately ¼” – ½” following the sequence shown in Tie Rod Tightening Sequence (FIGURE 8) until spring is completely compressed. Be sure that each hollow tie rod slides into the counterbore in the endcap. Do not over tighten bolts. Refer to Assembly Torque Requirements Table (FIGURE 9).

All Models

Y. Install position indicator (13) and pointer (16), where applicable. Assemble adjusting screws (37), thread seals (36) and jam nuts (38). Lubricate the rubber face of the thread seal with Dow Corning #55 lubricant and install finger tight against the endcap. Tighten the seal approximately one turn so that the rubber begins to bulge beyond the metal portion of the seal.
Z. Stoke actuator with rated supply air and check for leaks. The thread seal may be tightened up to one additional turn if there is any leakage at the adjusting bolt.

Assembly of Canted Yoke Actuators

Canted yoke actuators are assembled the same way as the symmetric yoke actuators except for the following additional instructions for specific models.

Canted yoke actuators have a non-symmetrical piston rod as well as a non-symmetrical yoke. It is important to orient the piston rod with the longer dimension in relation to the yoke as shown in Figure 7c. Note that the finished housing assembly is used for both fail open and fail closed actuators.

(Models 135-1150)

A. Insert the yoke (2) into the housing (1) and position the yoke in the fully clockwise position (viewed from the thrust plate (13b) side).

B. Insert the piston rod (4) correctly oriented with the longer dimension as shown in figure 7c.
C. Install the thrust pin (9) and roller bearings (10) using generous amounts of Whitmore Omnitemp grease and install both pin retaining rings (11).
D. Shift the yoke (2) and piston rod (4) so that the thrust pin (11) and roller bearing (10) assembly can be inserted into the yoke slot. The absence of the piston rod bushings (7) and output shaft bushings (5) allows just enough room for this process.
E. Insert the lower output shaft bushing (5) and retaining ring (12b). This bushing must have a press fit. The integral seal o-ring must be oriented toward the yoke.
F. Insert the yoke key (6b) into the output shaft (3), then insert the output shaft into the housing (1) and yoke(2) and lower output shaft bushing (5).
G. Install the upper output shaft bushing (5) over the output shaft and into the housing (5). The bearing must have a press fit. The integral seal o-ring must be oriented toward the yoke.
H. Install output shaft thrust washer (22), thrust plate gasket(13b) thrust plate (13b), thrust washer (22) and retaining ring (8).
I. Install Pointer adaptor (13) using two socket head cap screws.
J. Install the thrust plate seal (12), pointer (16) and pointer washer (21).

(Models 1485-7114)

Assembly for these canted yoke actuator models is identical to the symmetric yoke models. However, the yoke (2) must be oriented as shown in figure 7b. The left and right piston rods are different lengths. Refer to Figure 7c to assure the correct orientation.

11. Operating instructions

Operate the actuator in accordance with the pressure and temperature limits specified on the nameplate. See the appropriate Morin Catalog for technical information.

12. IMPORTANT SAFEGUARDS

Caution: To reduce the risk of injury:

- **Read the entire Operation and maintenance Instruction manual before installing, operating, or servicing this actuator.**
- Inspect the actuator regularly for signs of corrosion and repair immediately.
- Always remove pressure and disconnect power supply before servicing the actuator.
- Keep hands and feet clear of an actuator that is in service.
- Do not disassemble the actuator without reviewing the disassembly procedure in this manual first. This is particularly important that the proper procedure be followed to avoid injury from internal spring power.
- Before attempting to remove an actuator from the equipment it is assembled to, always be sure that spring is in the "failed" or extended position. Remove any accessory equipment that may cause the spring to be cocked. If there is any doubt that the actuator is in the "failed" position, remove the air pressure from the actuator and install a long threaded bolt (a bolt that exceeds the length of the cylinder) in place of both travel stops. Once the actuator has been removed from the equipment the long bolts must be removed first before the actuator can be disassembled.
- Repair or replace a damaged actuator immediately.

- Inspect the vent valves on models 1480 – 2380 during regular maintenance periods. The valves should allow leaking fluids to escape but prevent contaminates from the surrounding atmosphere from entering the actuator. Fluid leaking from the lower valve indicates a valve stem seal leak. Fluid leaking from the upper valve indicates a leaking cylinder seal. If leakage is observed from either valve disassemble and repair the source immediately. Never replace the vent valves with plugs.
- Operate the actuators within the pressure and temperature ranges specified on the nameplate. Otherwise the actuator life may be reduced or serious safety hazards may develop.

Additional Safety Instructions for Actuators used in a Potentially Explosive Atmosphere under ATEX 94/9/EC

Marking

- ATEX 94/9/EC , Group II , category (2), G

Selection

- Ensure that the equipment is marked with the correct equipment group, category and type of atmosphere for the application and that the safety instructions are followed for each item of the equipment.
- In particular, all items included in an actuator package, including valve, actuator and all accessories should be CE marked to ATEX in the appropriate and / or requested category.

Installation

- The installer must only use tooling appropriate to the working area, see EN 1127-1 Annex A.
- Installation must be carried out at ambient temperature.
- During installation ensure that no metallic shocks / impacts are made to the equipment or the adjacent piping.
- Ensure that the equipment is suitably earthed (grounded) through the pipe or individually.
- The installer should thoroughly follow the operating and safety instructions provided for each individual item of equipment.
- When the valve is to handle hot fluids or fluids where exothermic reactions may take place, the end user must take al the necessary measures to ensure that the hot surface of the valve cannot provide a source of ignition to the surrounding gas, vapour, mist or dust atmosphere.
- Before putting into use or during operation with a dangerous fluid, ensure that no release of the fluid to atmosphere can take place.

Maintenance

- The operator must ensure that only personnel qualified to work in a potentially hazardous area are allowed to carry out maintenance appropriate to the category of the equipment in use.
- The end user must ensure that only tooling appropriate to the working area is used, see EN 1127-1 Annex A.
- All equipment must only be fitted with manufacturer's original spare parts.

Additional Safety Instructions for Actuators used in Emergency Shut-down Service or IEC 61508 (SIL) Compliant Installations

1. Actuators should be inspected for proper functioning and signs of deterioration every 100,000 cycles or annually (whichever comes first) under normal operating conditions. Inspect more frequently under severe operating conditions Defects should be repaired promptly.
2. Normal operating conditions are: Air Quality within ANSI/ISA-7.0.01 standards; operating temperature and pressures consistent with the actuator nameplate and catalog limits; environment free from excessive particulates; operating environment consistent with the actuator materials of construction. Under these conditions, actuator life can exceed a million cycles.
3. The recommended minimum operating interval is six months and a partial stroke is acceptable to confirm that the installation is functioning.
4. When an actuator has been repaired or any maintenance is performed, check the actuator for proper function (proof testing). Any failures affecting functional safety should be reported to the Pelham facility.
5. IEC 61508 (SIL) installations should consult the Morin factory to obtain the assessment and FMEDA report, which include failure data, PFD_{AVG}, and other associated statistical data to establish or satisfy SIL level or requirements. This information is available in report MOR 05-10-19 R001 V1 R2 FMEDA B-series actuators.
6. Proof testing of the actuator shall be performed on the interval determined per IEC 61508 / IEC 61511 requirements. A suggested proof test is included in report MOR 05-10-19 R001 V1 R2 FMEDA B-series actuators. No special tools are needed. The report includes the achieved proof test coverage.