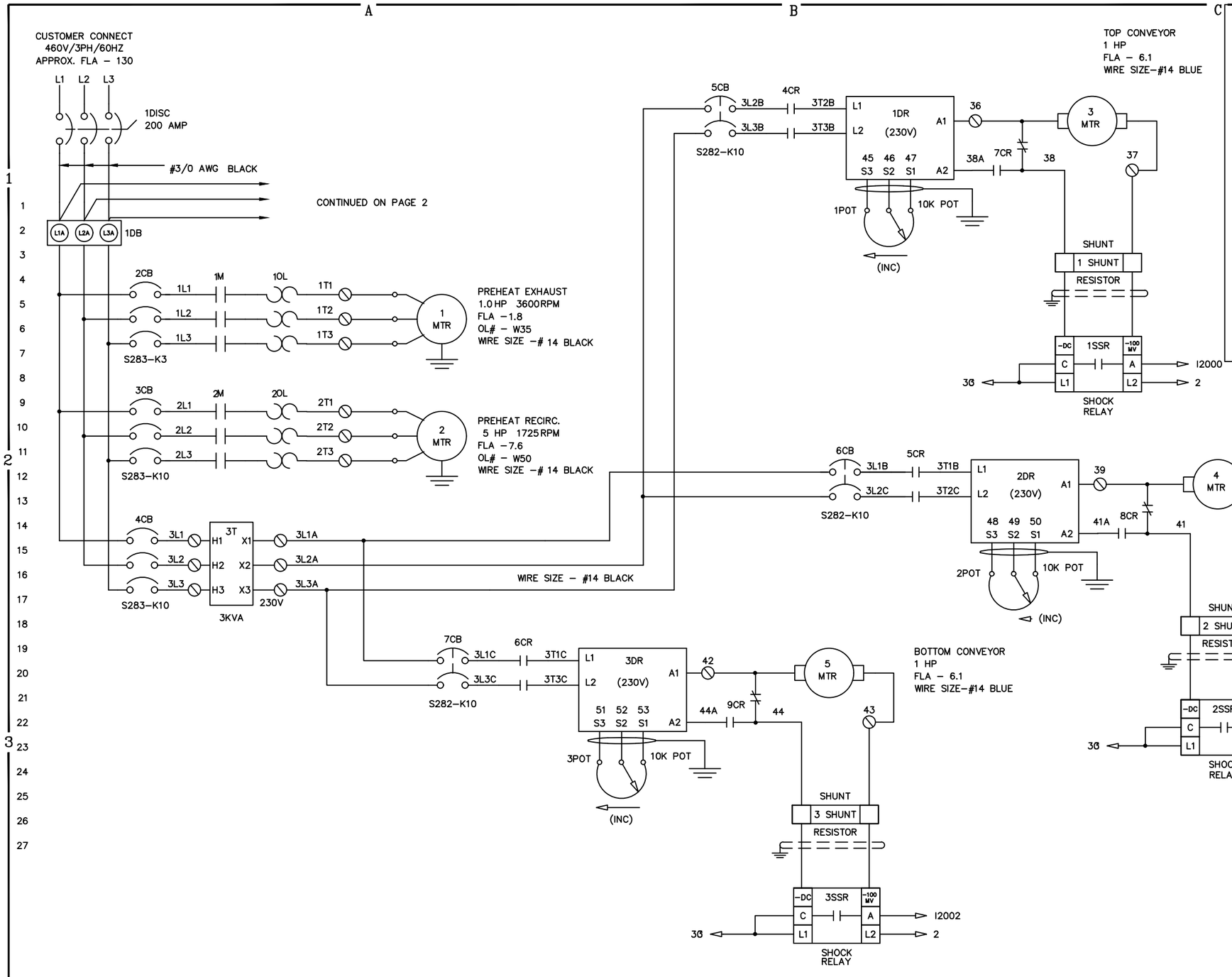

CUSTOMER TO SIZE ELECTRICAL SERVICE IN ACCORDANCE WITH ALL NATIONAL AND LOCAL CODES BASED ON THE INDICATED FULL LOAD AMPERES.

CUSTOMER SPECIFICATIONS ——— YES X NO ___

WIRING SPECIFICATIONS (CONTROL CABINET) ——— OSI X
JIC (GENERAL) X
JIC (MASS) ___

WIRING SPECIFICATIONS (OVEN) ——— OSI X
JIC (GENERAL) X
JIC (MASS) ___

ELECTRICAL CABINET REMOTE ——— YES X NO ___

GAS TRAINS REMOVABLE ——— YES ___ NO ___

INFORMATION SPECIFIC TO JOB:

CL	LOC	NO	CHANGES	BY/DATE	C.N.
			REVISION	MT 2-8-93	
			REVISION	MT 1-20-93	

Delco Remy

DIVISION of GENERAL MOTORS CORPORATION
2401 COLUMBUS AVENUE ANDERSON , INDIANA 46016

S.B.U.
PLANT
DISTRIBUTION
MODEL NAME — MODEL NO.
PART NAME — PART NO. 5316
ALSO USED FOR
DESCRIPTION INK CURE OVEN
REFERENCE NO.
DRAWN BY BUD — DATE 10-5-92
CHECKED BY — DATE
ENGINEER BUD — APPROVED
GRAPHICS FILE
SHEET NO. 1 OF 13 — SCALE

DWG. NO. OSI 20–5446–4

DWG. NO. 10475190B